Modulate 824 (Slope 1)

Aug 2018

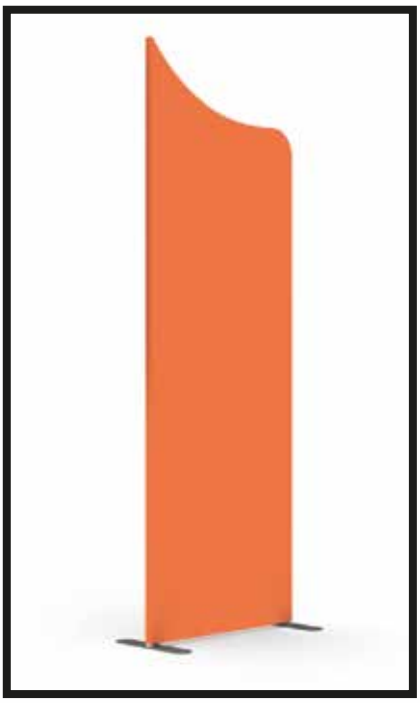

PARTS *(NOT TO SCALE)*

Top Pole Section

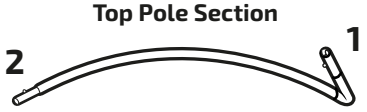

Top Corner Radius Section

Vertical Pole Sections

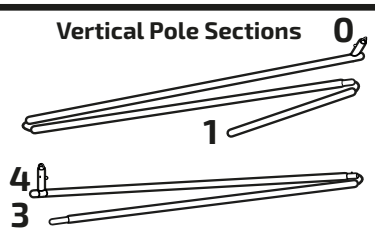

Support Pole

Bottom Horizontal Pole

Feet

Gloves

Optional Half Feet

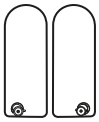

NOT SUPPLIED WITH KIT AND THEY ARE SOLD SEPARATELY

1

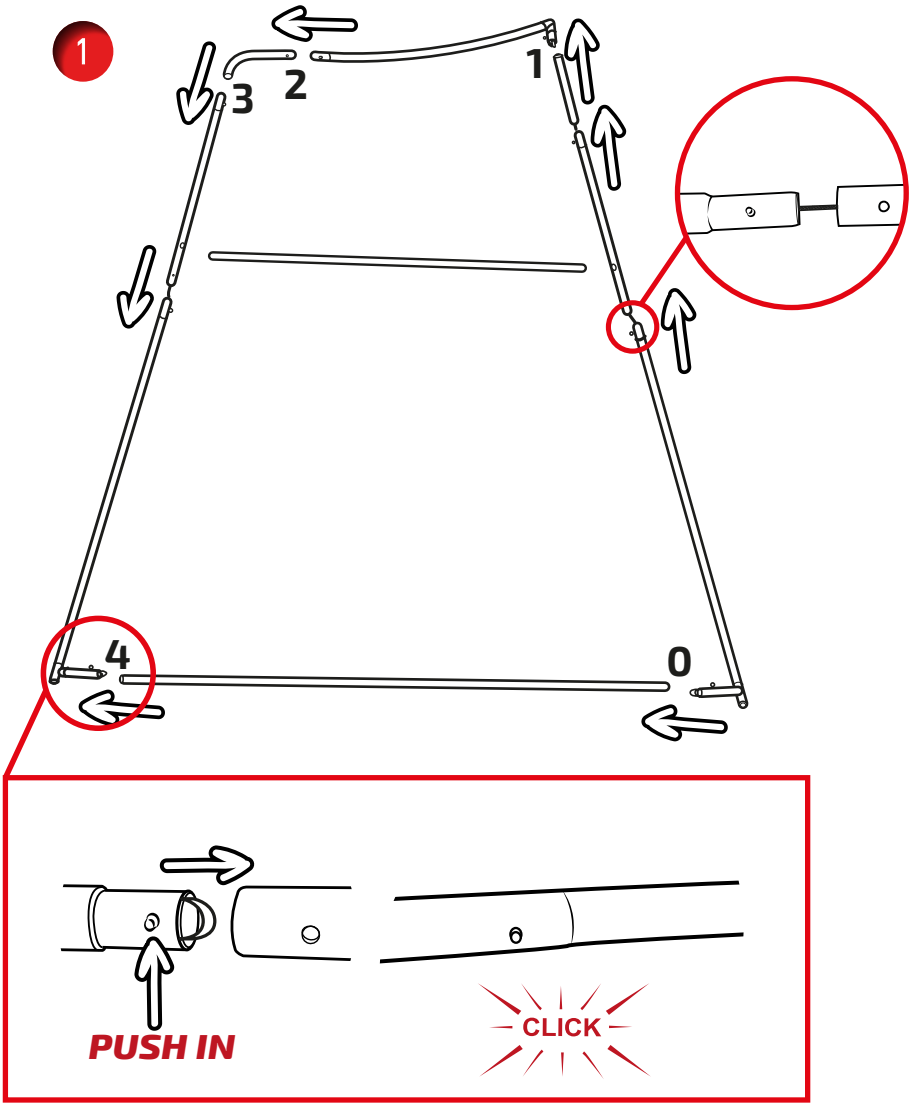

2

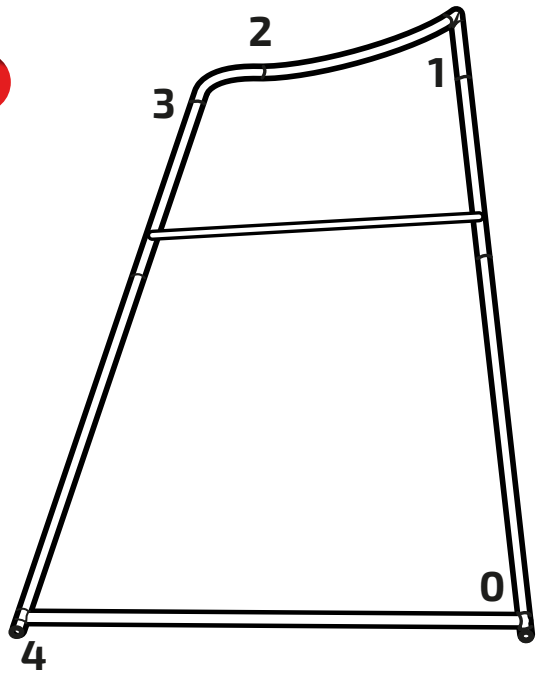

Disclaimer: We are continually improving and modifying our product range and reserve the right to vary the specifications without prior notice. All dimensions and weights quoted are approximate

Modulate 824 (Slope 1)

Aug 2018

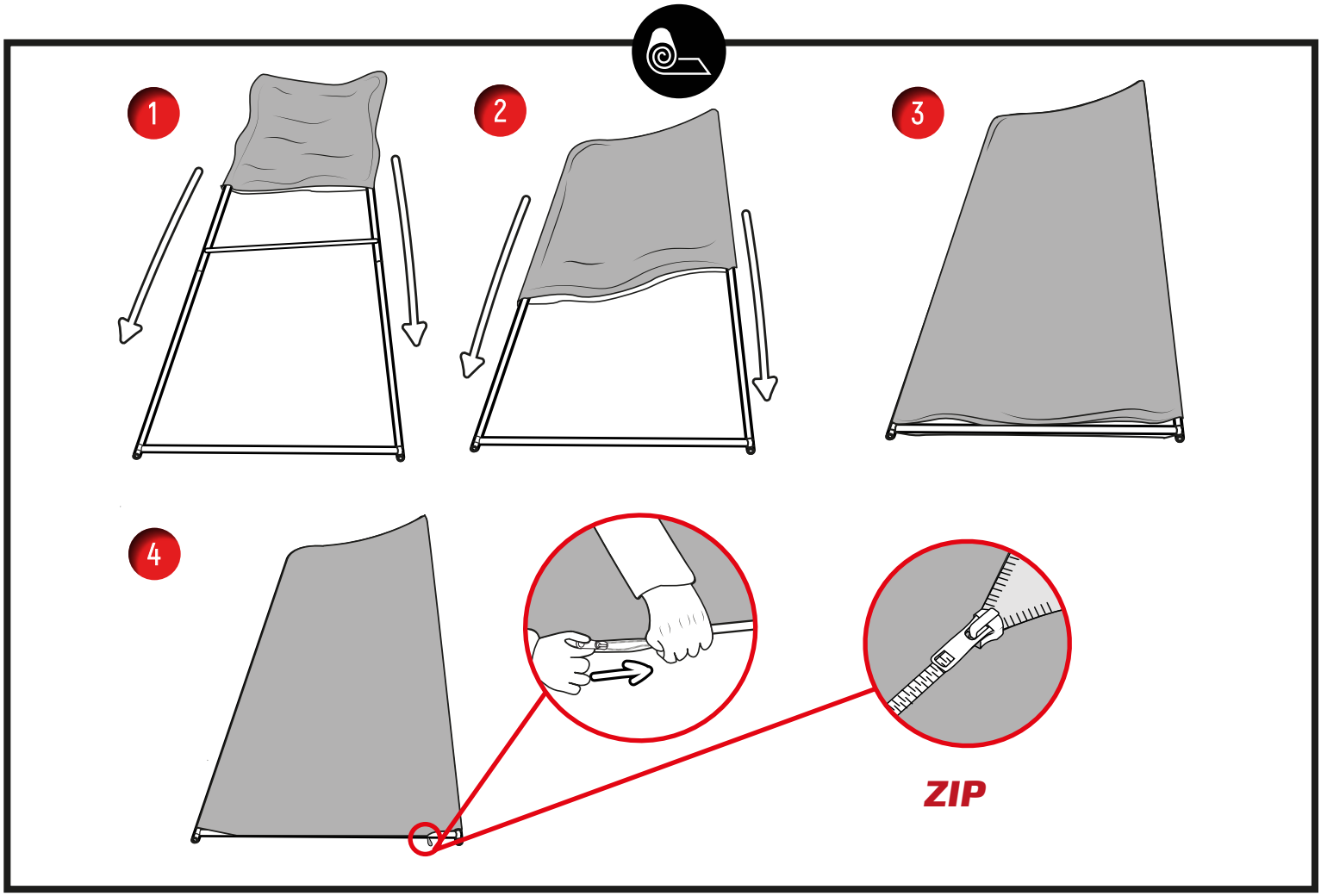

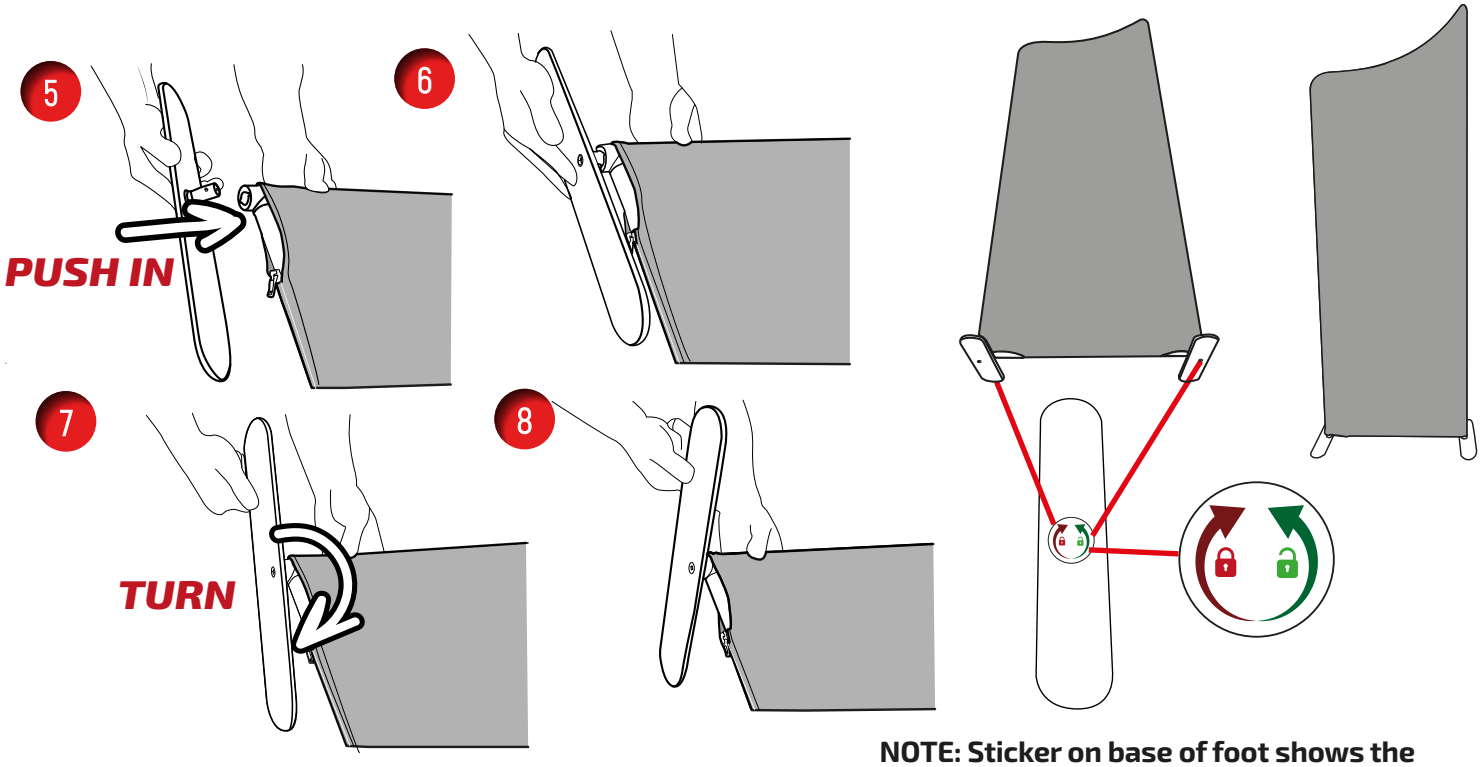

Turn clockwise to lock foot in position
Turn anti-clockwise to unlock foot

NOTE: Sticker on base of foot shows the directions for locking/unlocking foot

NOTE: TWO POSITIONS FOR THE FEET (SEE OPTION 1 FOR SECOND POSITION)

Disclaimer: We are continually improving and modifying our product range and reserve the right to vary the specifications without prior notice. All dimensions and weights quoted are approximate

Modulate 824 (Slope 1)

Aug 2018

OPTIONAL (HALF FEET)

OPTION 1

NOTE: HALF FEET CAN BE POSITIONED ONTO THE FRAME TWO DIFFERENT WAYS

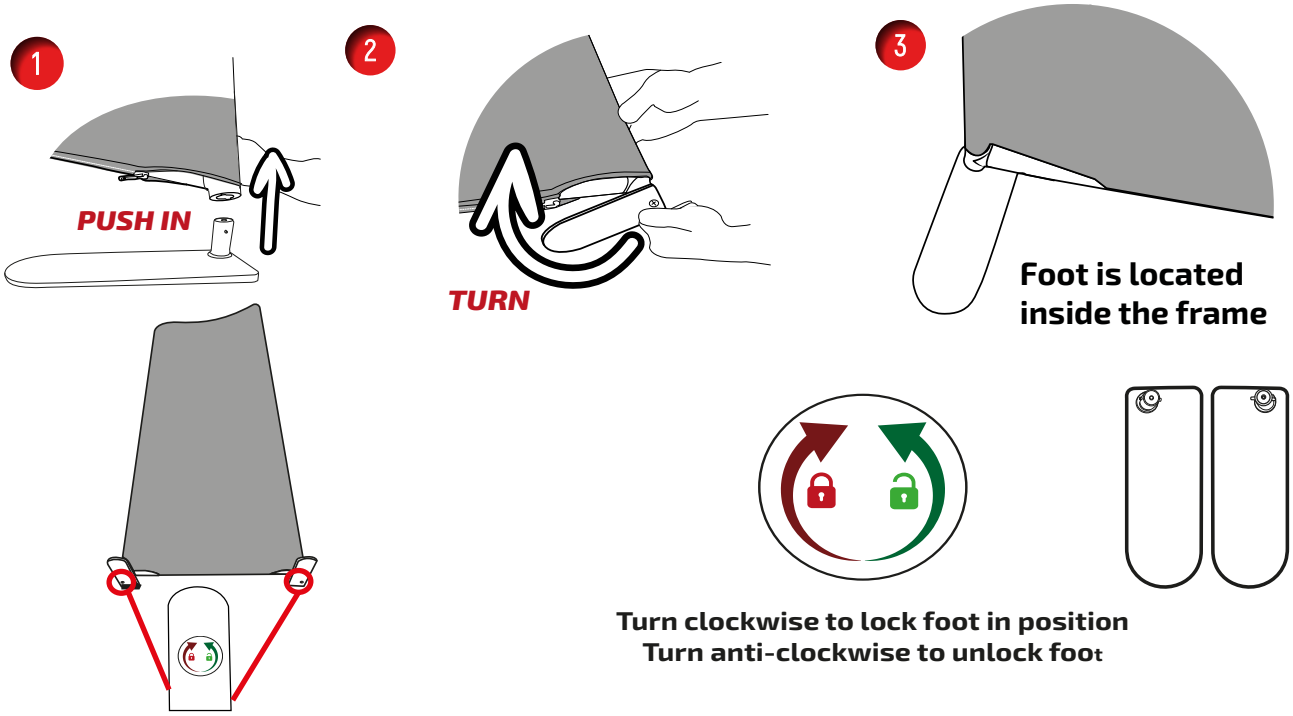

Turn clockwise to lock foot in position
Turn anti-clockwise to unlock foot

OPTION 2

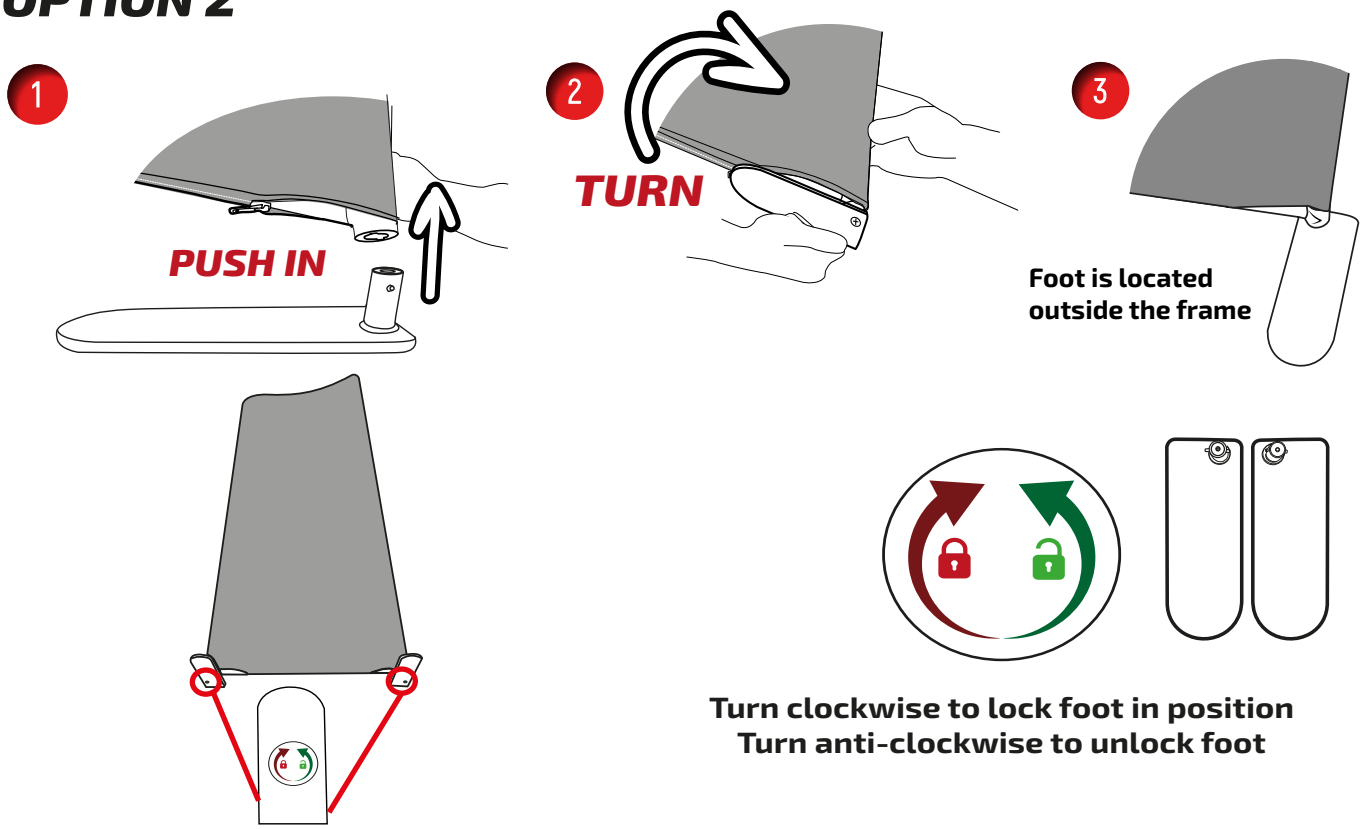

Turn clockwise to lock foot in position
Turn anti-clockwise to unlock foot

Disclaimer: We are continually improving and modifying our product range and reserve the right to vary the specifications without prior notice. All dimensions and weights quoted are approximate

Modulate 824 (Slope 1)

Aug 2018

x1

CONNECTING MULTIPLE FRAMES

NOTE: SECOND FRAME (420 STRAIGHT NOT INCLUDED)

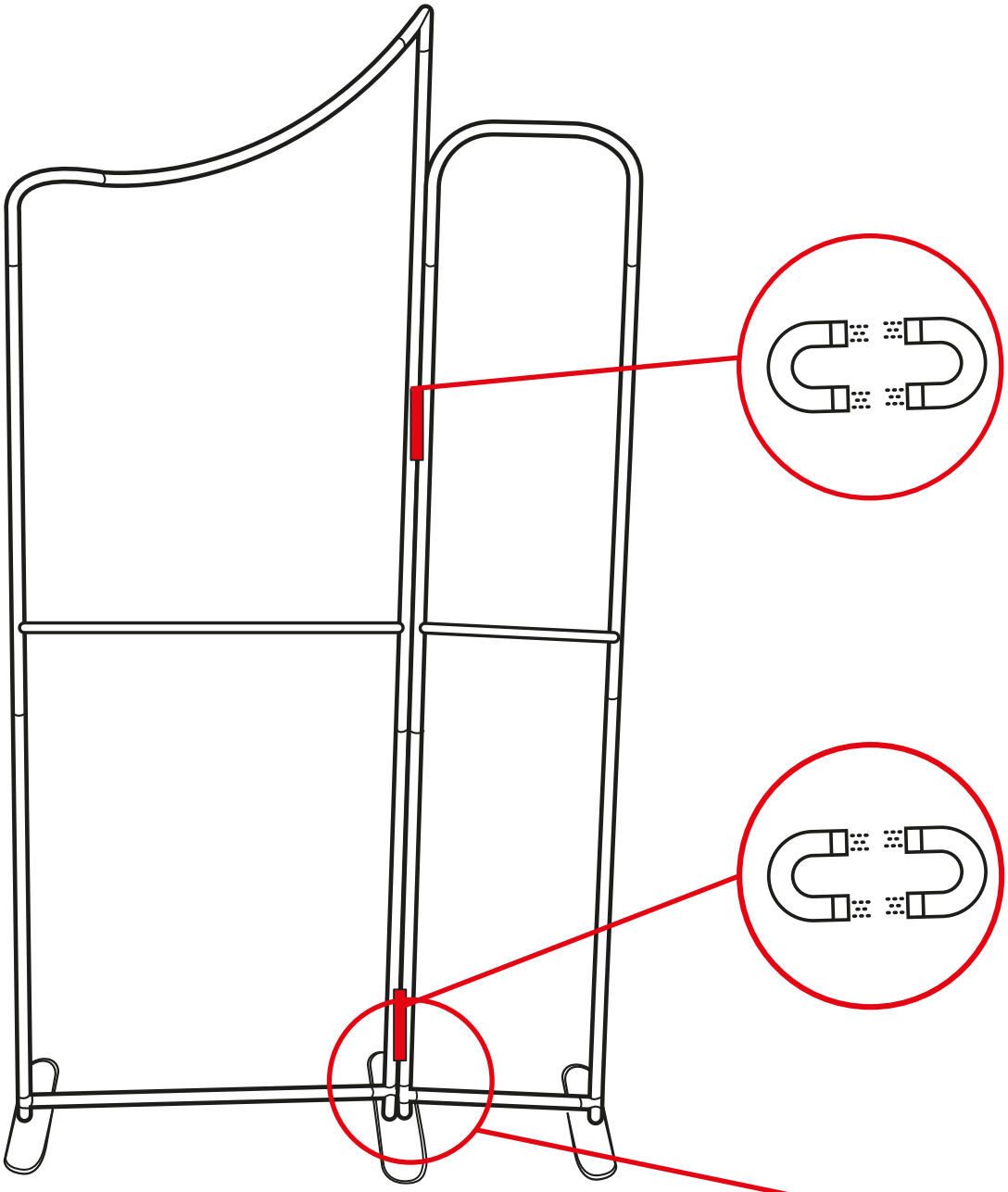

824 Slope 1 Frame and 420 Straight Frame

Remove one foot from second frame and align both frames on one foot

NOTE: FOLLOW OPTION 2 FOR HALF FEET TO CONNECT TWO FRAMES ON ONE FOOT

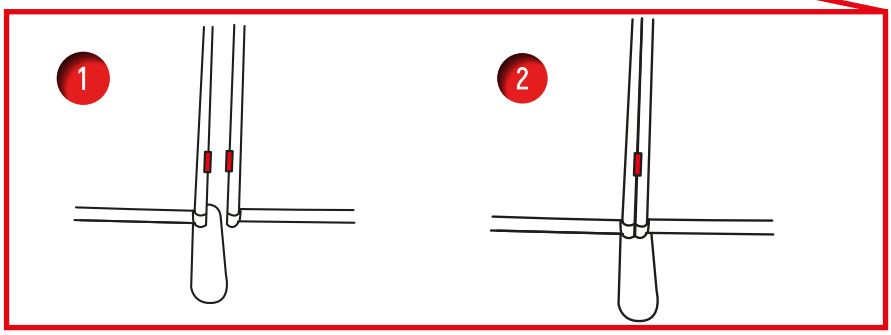

Disclaimer: We are continually improving and modifying our product range and reserve the right to vary the specifications without prior notice. All dimensions and weights quoted are approximate