INSTA LED COUNTER

1 TEX

Attract attention with the Insta LED counter! This illuminated counter with automatic scissor lift system and pre-assembled LED strips can be set up in no time at all and will be perfect for enhancing all your indoor events.

Product Specifications

- Frame with steel scissor lift and aluminium mounting bracket
- Black MDF top and base (thickness: 15mm) with a 3mm channel
- Maximum top load bearing: 30kg to be distributed
- LED included and pre-assembled
- Graphic attachment with SEG optional. Graphic with a vertical zip on the back (to allow the power lead cable to pass through)
- Nylon carry bag with foam insert, carry handle and shoulder strap included

Features and Benefits

- Quick and easy to assemble (tool free)
  - Pre-assembled edge-lit LED lighting
  - Pneumatic scissor lift activated by lifting the top
  - The graphic remains in place when the structure is folded up
- Strong structure
- Compact structure when folded, easy to transport

Hardware

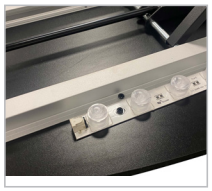

Pre-assembled LED

Carry bag

Recommanded Media

- Backlit fabric made with 3 x 12 mm SEG

The printing templates provided are for guidance only. They take into account internal processes which may vary depending on your equipment, materials and finishes. If you are printing your own material, it is your responsibility to test the compatibility of your media with the product before use.

We are continually improving and modifying our product range and reserve the right to vary the specifications without prior notice. All dimensions and weights quoted are approximate and we accept no responsibility for variance. E&OE.

INSTA LED COUNTER

Lighting info:

2 x 474 mm LED strips / 15W (unit)
10 LED lens per strip
950 Lumens - 6500-7000 Kelvins

Input: 100/240V
Output: 24V 0.75A
Cable lenght: 2,7m

Hardware Information

Code	Description	Hardware assembled dimensions (mm) w x h x d	Hardware assembled weight*	Package dimensions (mm) h x w x d	Package weight
INSTA-CNTR-BLK	Insta LED Counter	782 x 1015 x 398	13 kg	180 x 860 x 470	15,5 kg

*Without graphic

We are continually improving and modifying our product range and reserve the right to vary the specifications without prior notice. All dimensions and weights quoted are approximate and we accept no responsibility for variance. E&OE.

INSTA LED COUNTER

Assembly of the hardware and graphic

1

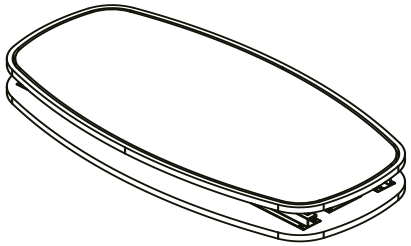

2

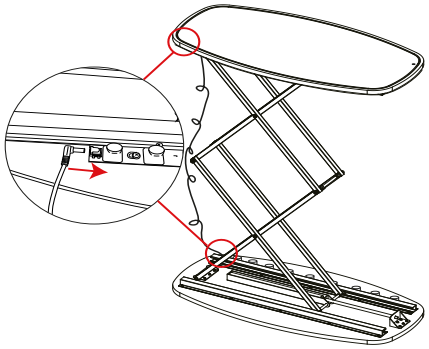

3

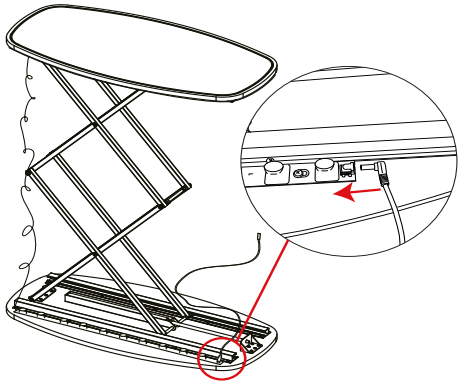

4

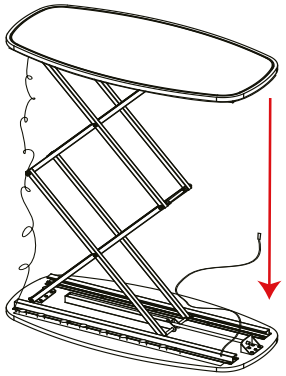

5

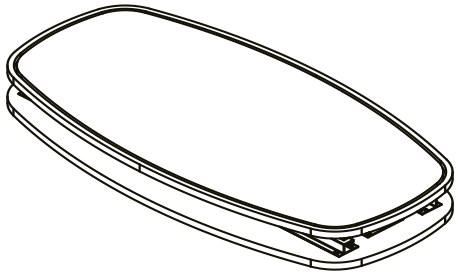

6

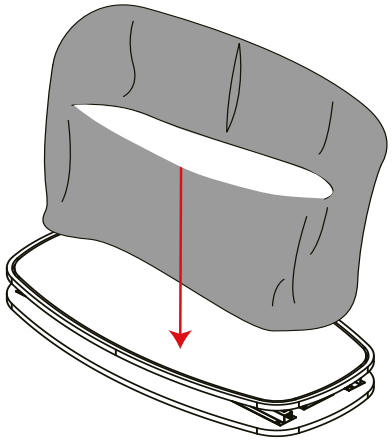

We are continually improving and modifying our product range and reserve the right to vary the specifications without prior notice. All dimensions and weights quoted are approximate and we accept no responsibility for variance. E&OE.

Assembly of the hardware and graphic

7

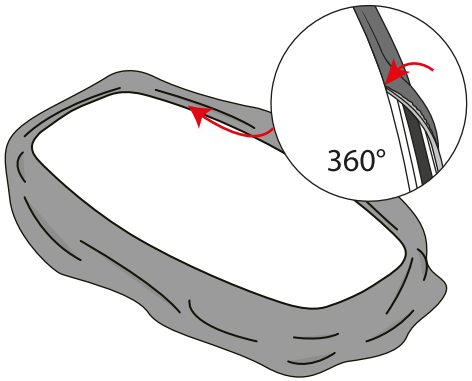

8

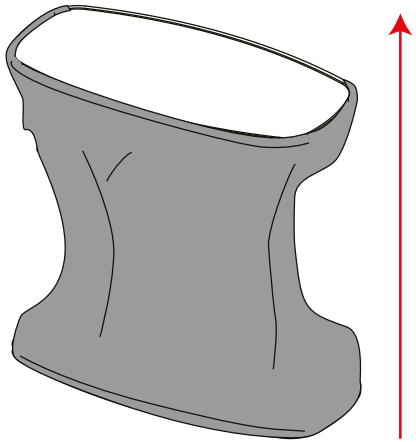

9

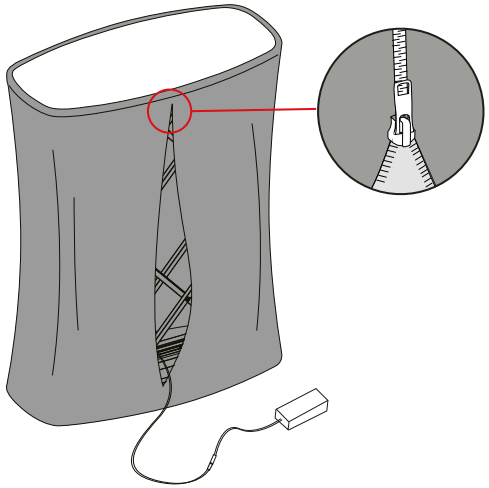

10

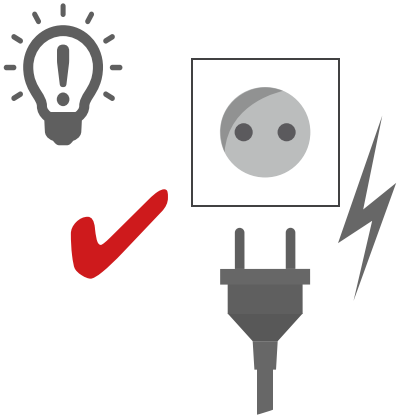

We are continually improving and modifying our product range and reserve the right to vary the specifications without prior notice. All dimensions and weights quoted are approximate and we accept no responsibility for variance. E&OE.