75MM LIGHTBOX - ASSEMBLY INSTRUCTION

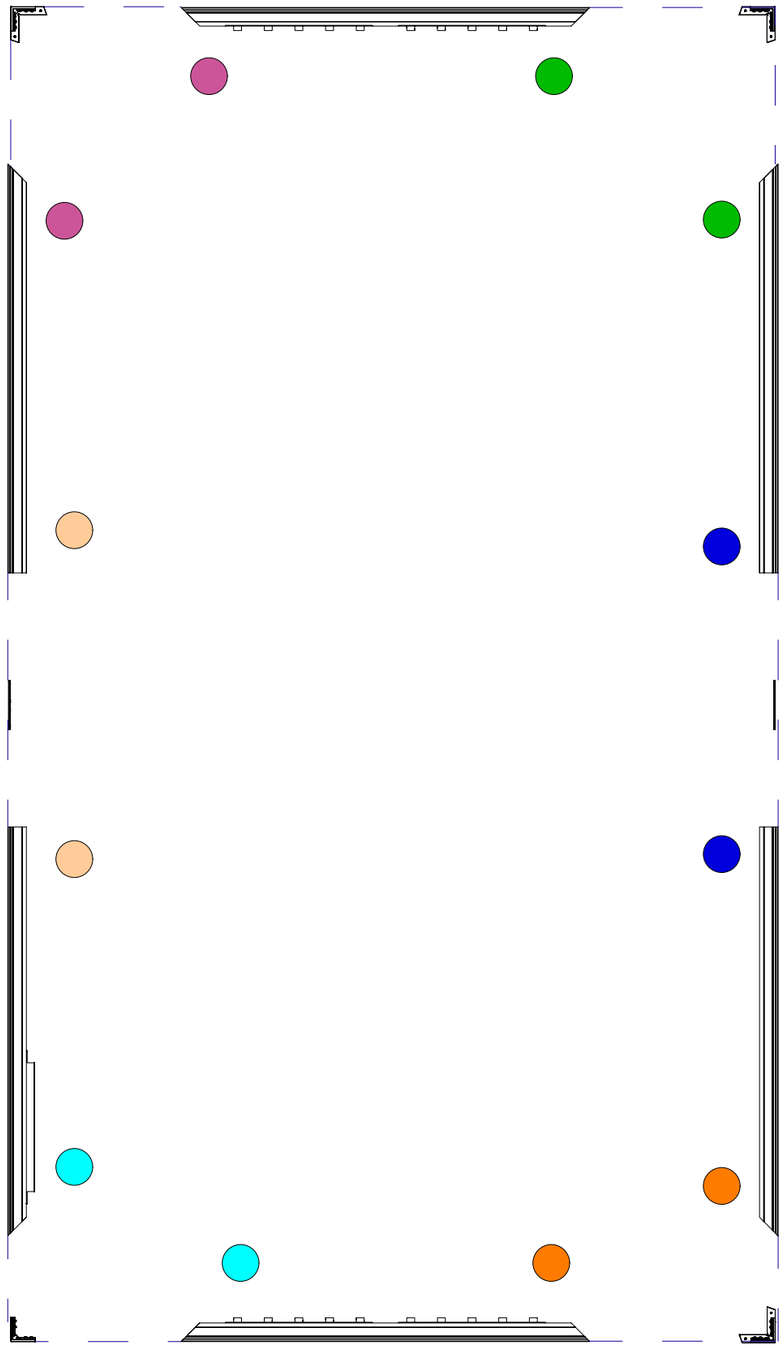

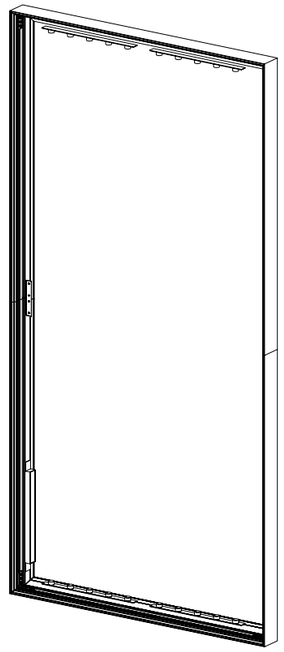

EACH LIGHTBOX EXTRUSION IS COLOUR-CODED.
JOIN THE DOTS OF THE SAME COLOUR TO ASSEMBLE.
EXAMPLE ON THE LEFT. PLEASE NOTE THAT STICKER COLOURS MAY VARY.
LOCKS AND LIGHTS ARE PRE-FITTED.

75MM LIGHTBOX - ASSEMBLY INSTRUCTION

1

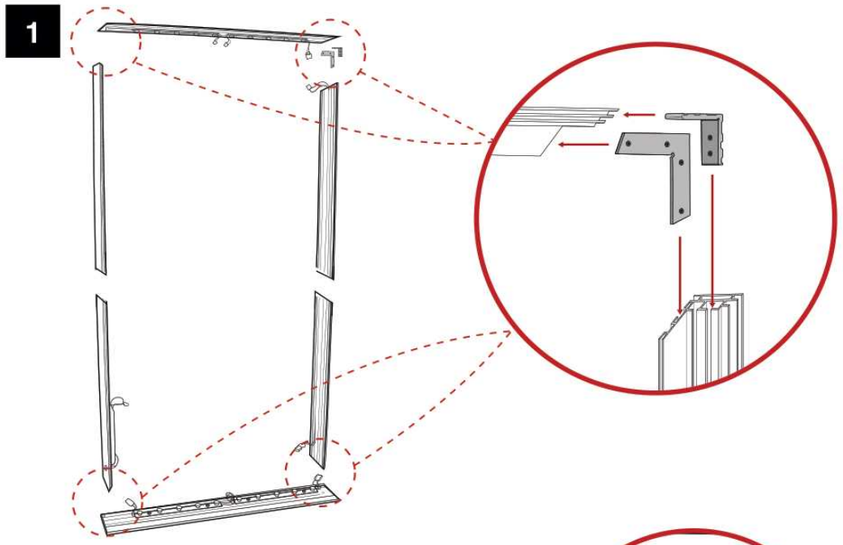

2

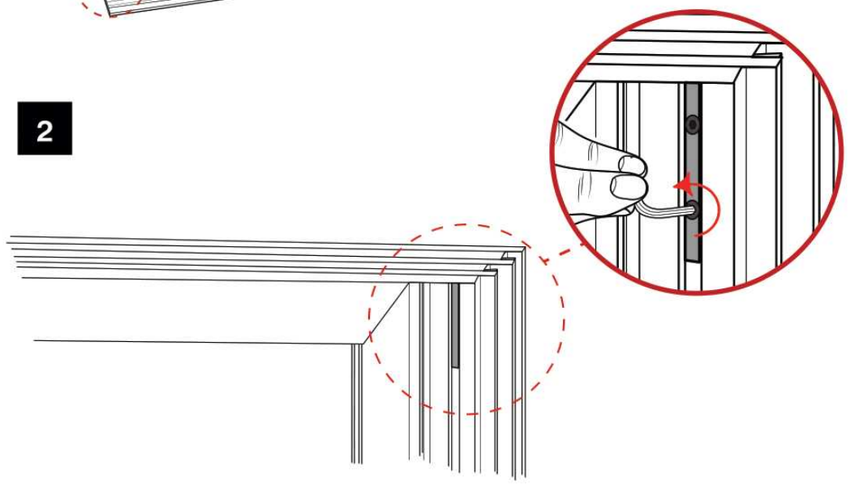

DOUBLE CHECK ALL SOCKETS AND CONNECTIONS BEFORE SUPPLYING POWER. MIS-USE COULD DAMAGE LED LIGHTS

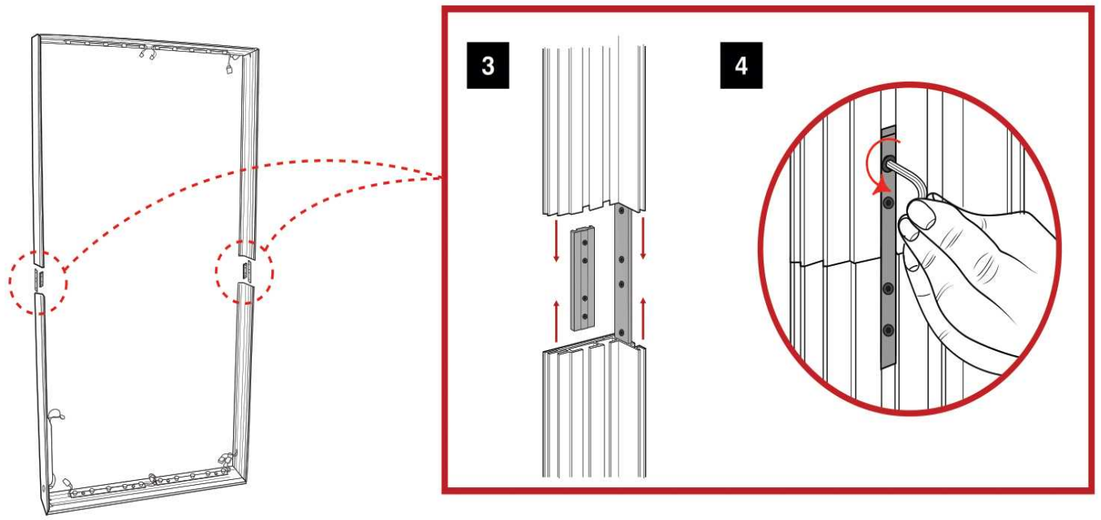

75MM LIGHTBOX - ASSEMBLY INSTRUCTION

APPLYING GRAPHICS

3

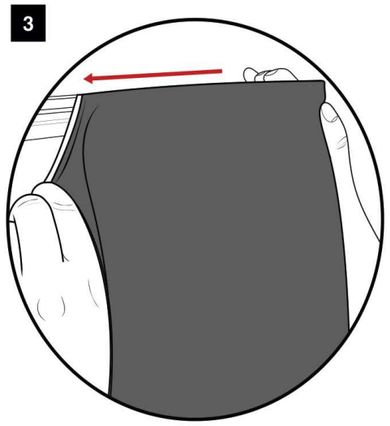

4

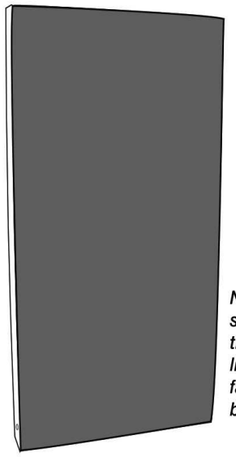

Note: Repeat steps for the rear of lightbox with fabric or backing board

5

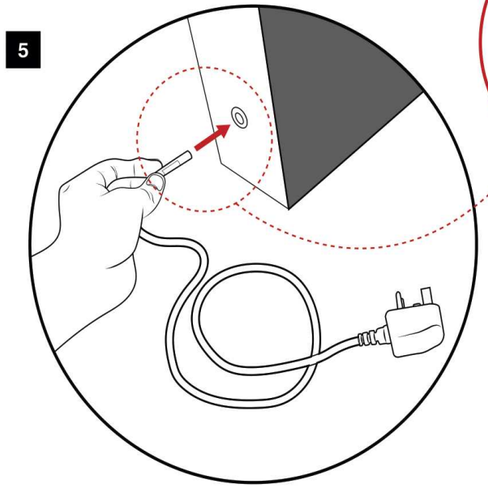

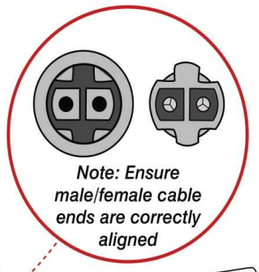

Note: Ensure male/female cable ends are correctly aligned

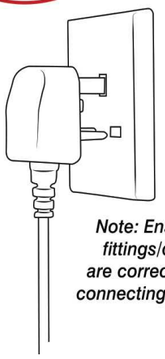

Note: Ensure all fittings/cables are correct before connecting to power

MOUNTING FRAME TO WALL

1

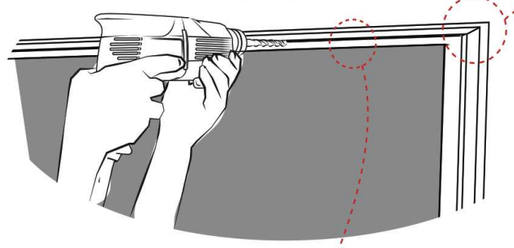

Drill holes as required (every 1000mm)

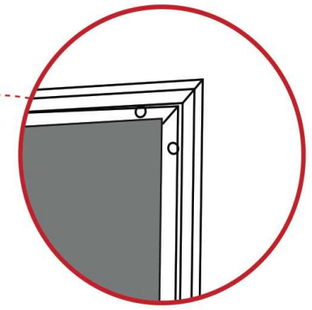

Two holes to be drilled at each corner of frame

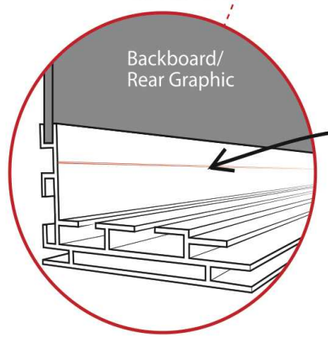

Use the "V-Groove" as a guide for where to drill the frame

2

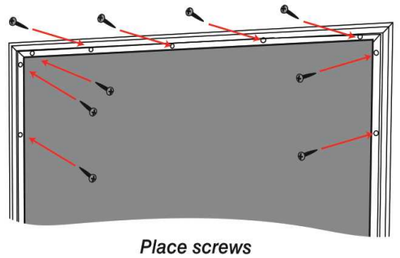

Place screws (not provied) into each of the drilled holes

3

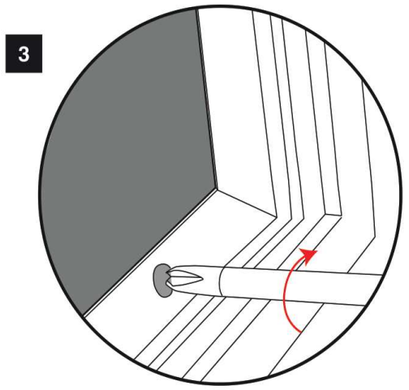

75MM LIGHTBOX - ASSEMBLY INSTRUCTION

LINKING UP/ATTACHING GRAPHICS

1

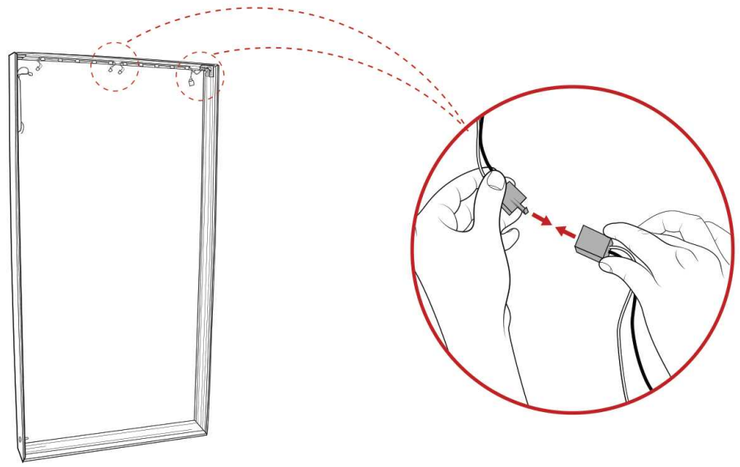

2

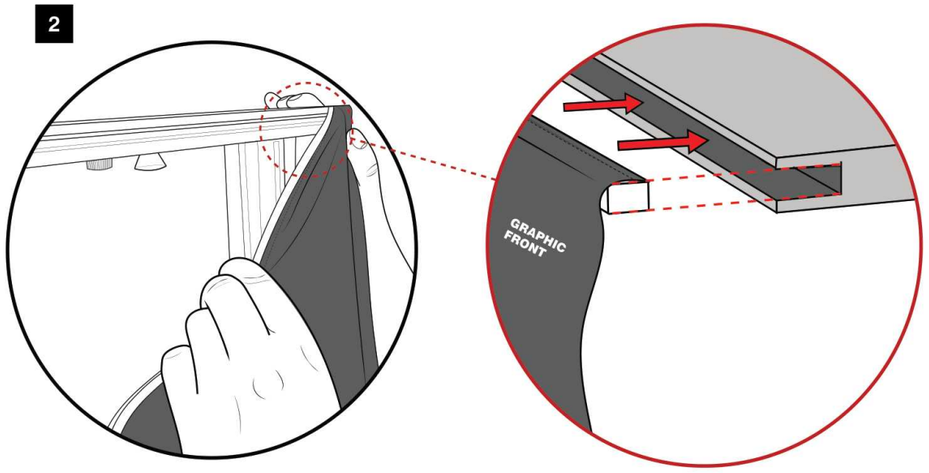

MOUNTING FRAME IN FREESTANDING POSITION WITH FEET - OPTIONAL

1

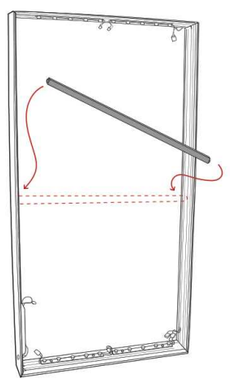

2

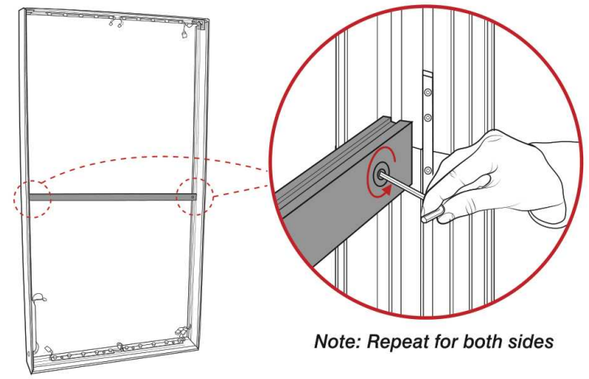

Note: Repeat for both sides

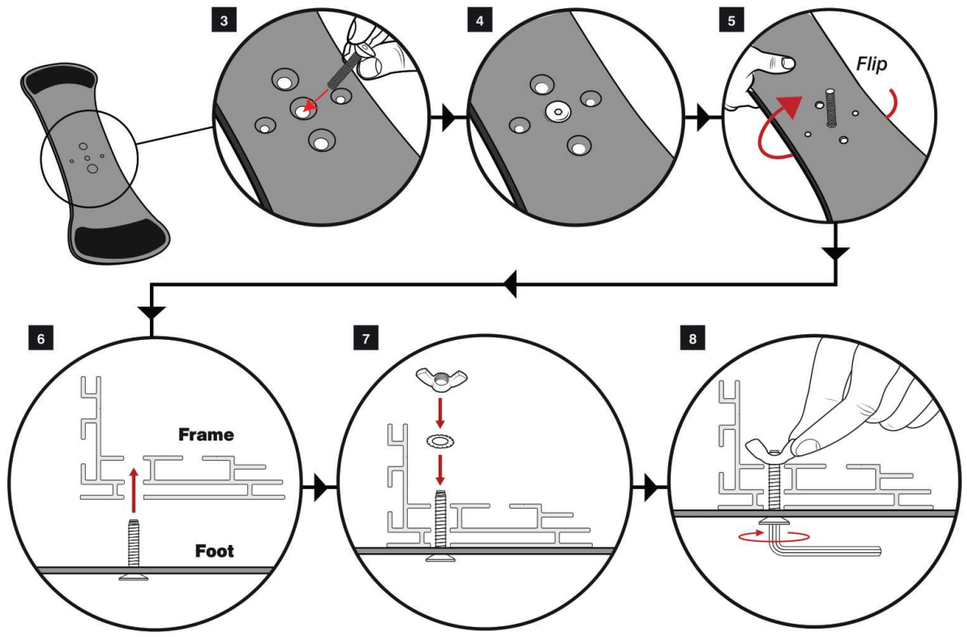

100MM, 125MM & 150MM LIGHTBOX - ASSEMBLY INSTRUCTION

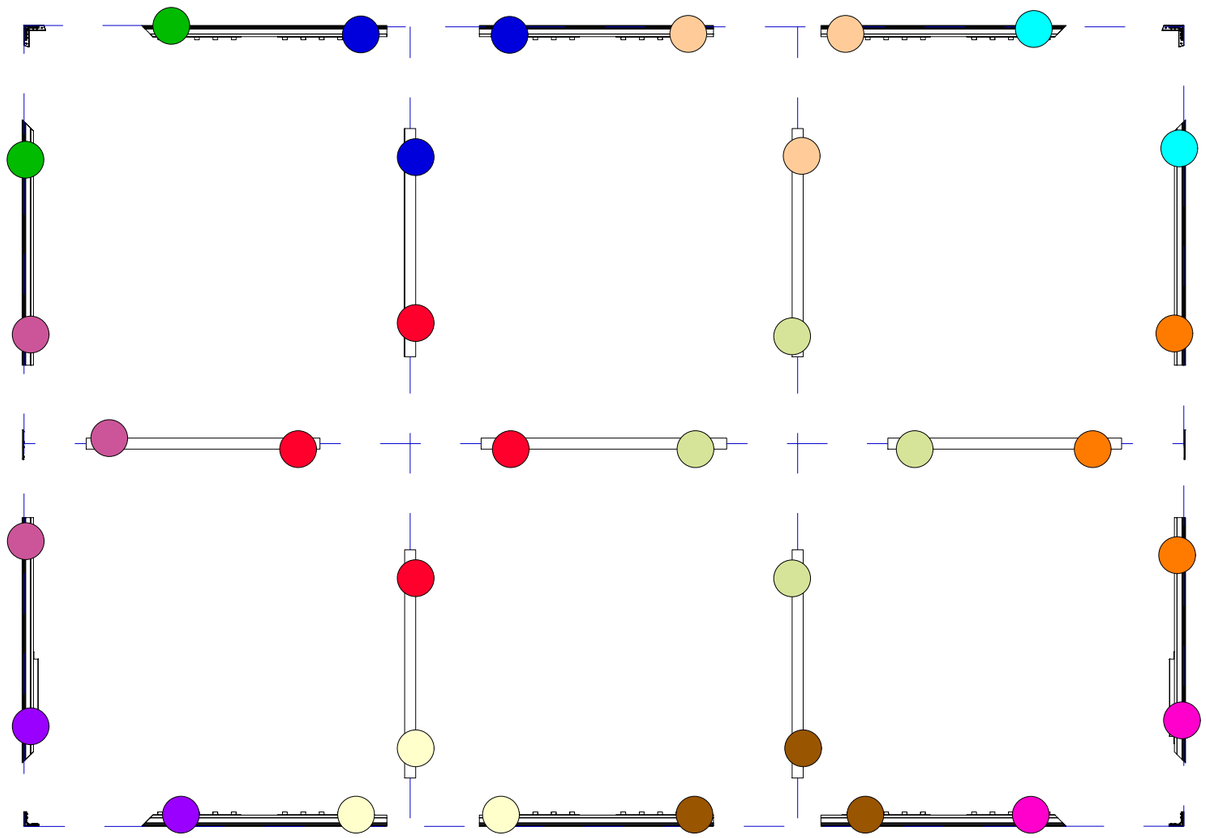

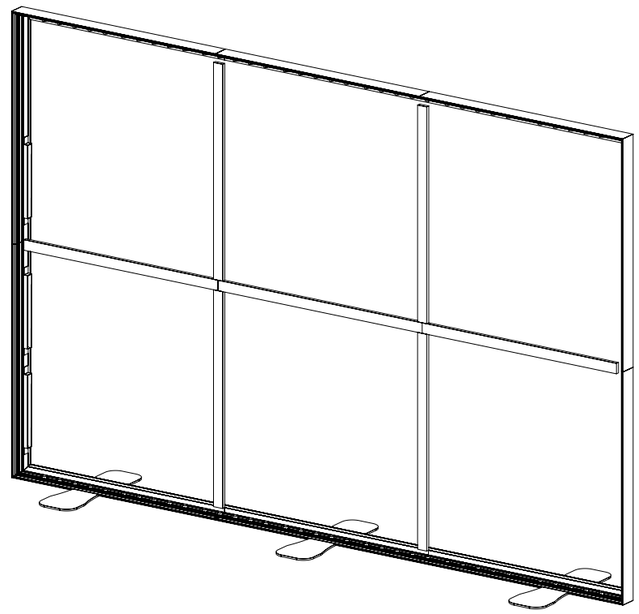

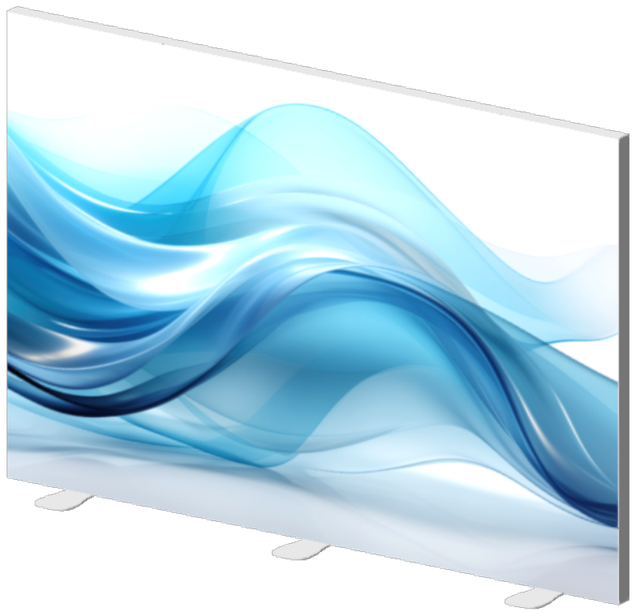

EACH LIGHTBOX EXTRUSION IS COLOUR-CODED.
JOIN THE DOTS OF THE SAME COLOUR TO ASSEMBLE.
EXAMPLE ABOVE. PLEASE NOTE THAT STICKER
COLOURS MAY VARY.
LOCKS AND LIGHTS ARE PRE-FITTED.

100MM, 125MM & 150MM LIGHTBOX - ASSEMBLY INSTRUCTION

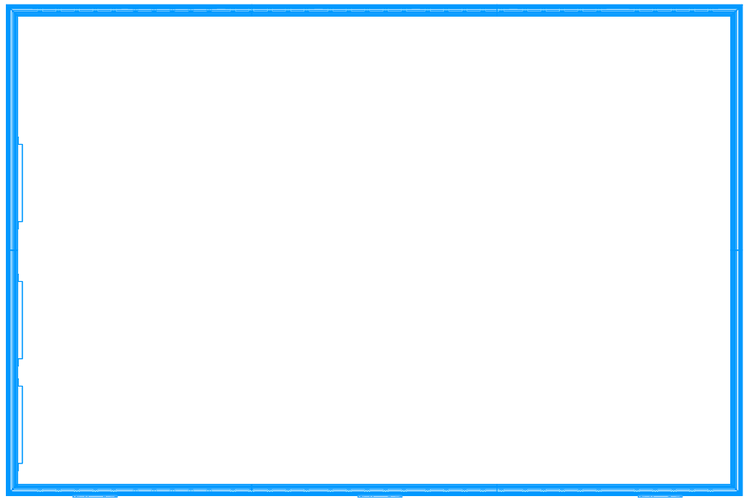

1. FIX FEET TO THE BOTTOM EXTRUSION & BULD THE OUTER FRAME.

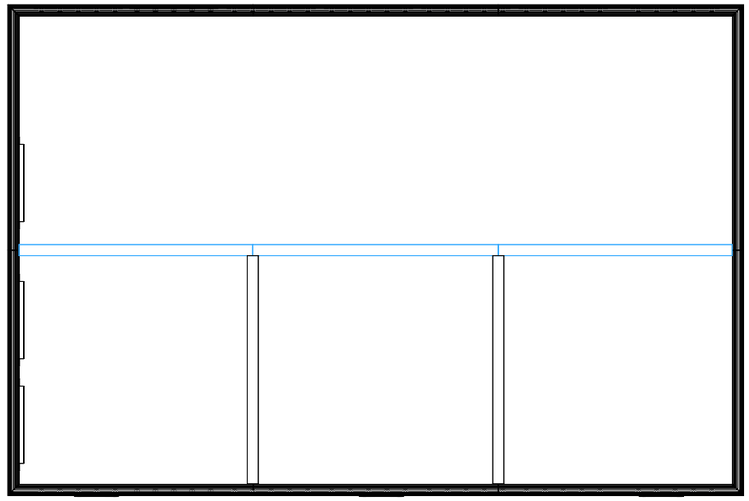

3. ATTACH THE BARS JOINED IN SERIES.

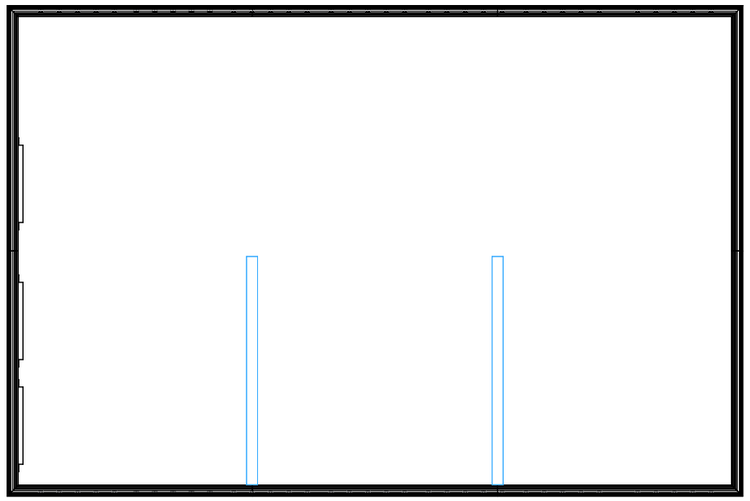

2. ATTACH THE BARS BETWEEN LIGHT STRIPS.

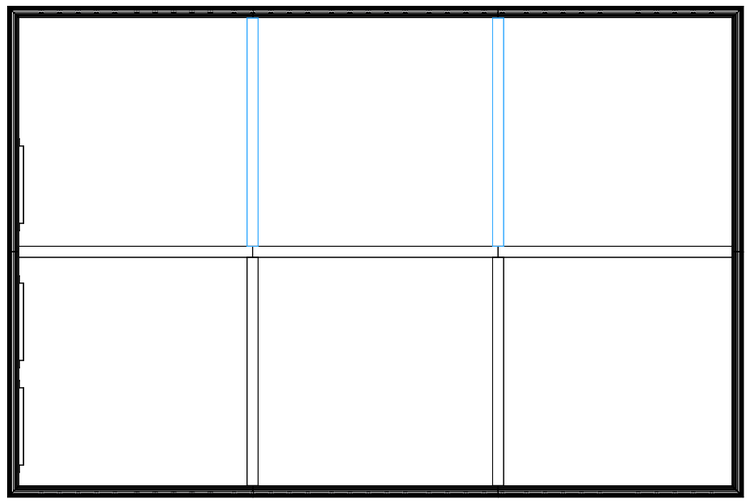

4. ADD THE REMAINING BARS.

100MM, 125MM & 150MM LIGHTBOX - ASSEMBLY INSTRUCTION

1

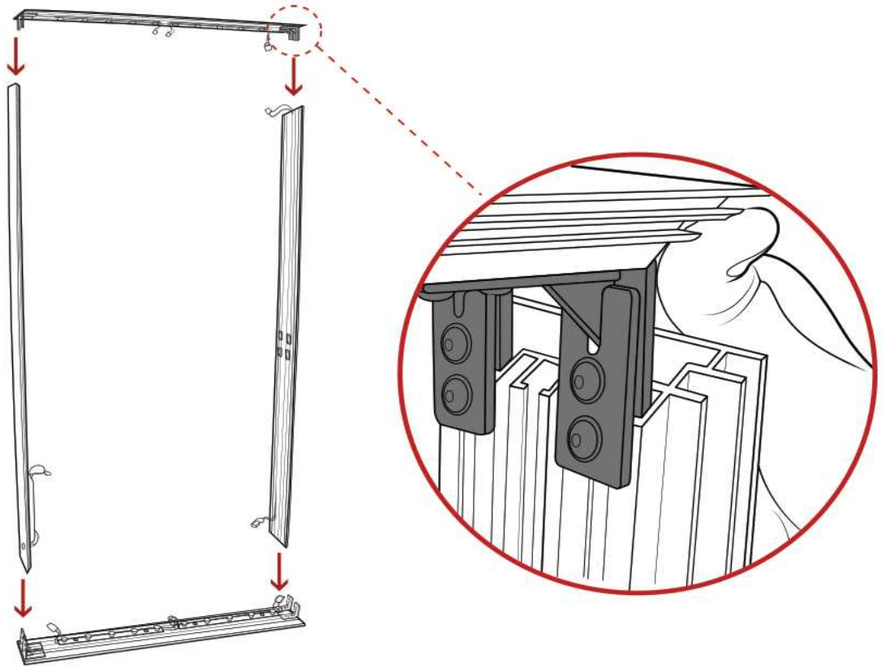

2

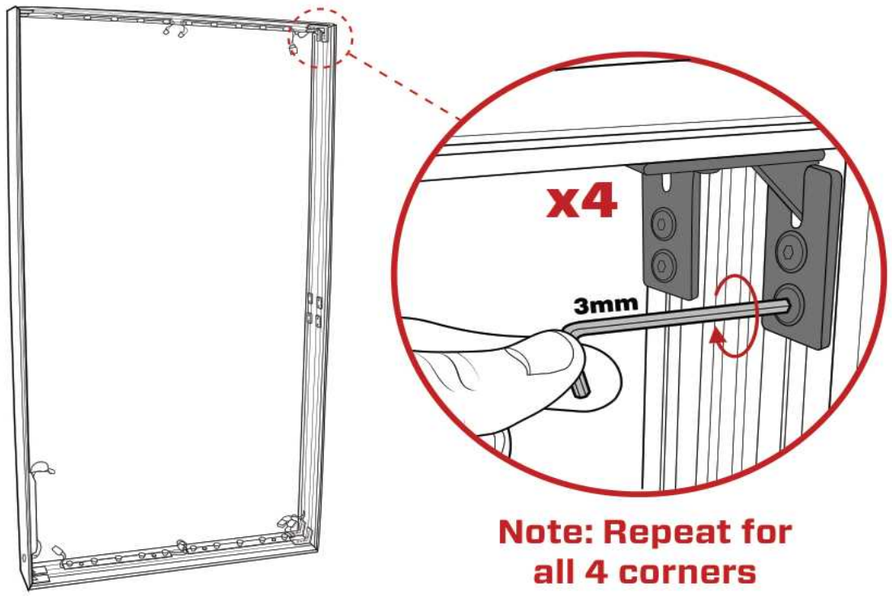

Note: Repeat for all 4 corners

DOUBLE CHECK ALL SOCKETS AND CONNECTIONS BEFORE SUPPLYING POWER. MIS-USE COULD DAMAGE LED LIGHTS

3

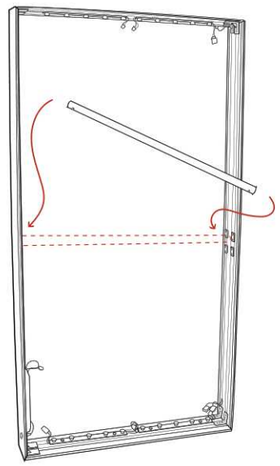

4

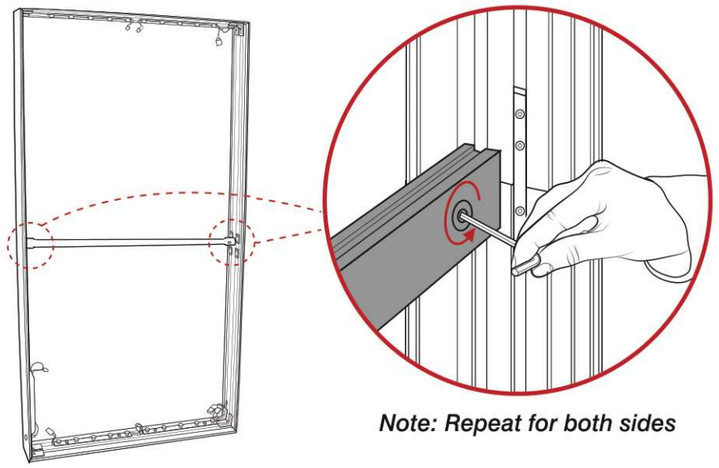

Note: Repeat for both sides

100MM, 125MM & 150MM LIGHTBOX - ASSEMBLY INSTRUCTION

APPLYING GRAPHICS

3

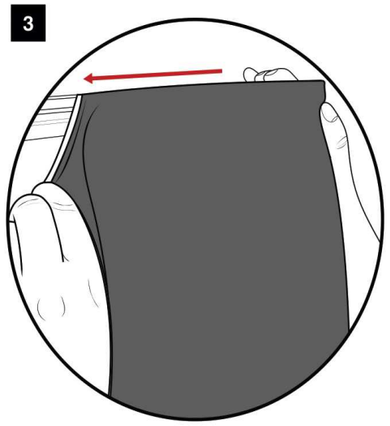

4

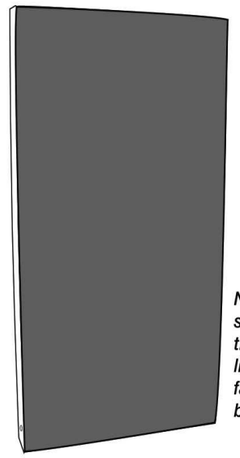

Note: Repeat steps for the rear of lightbox with fabric or backing board

5

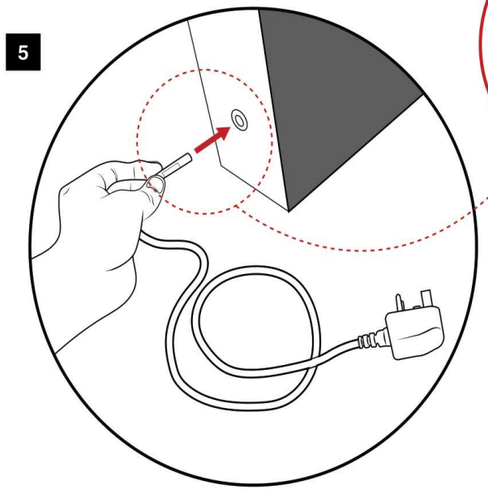

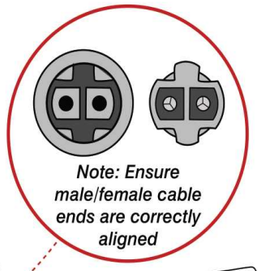

Note: Ensure male/female cable ends are correctly aligned

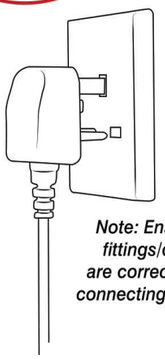

Note: Ensure all fittings/cables are correct before connecting to power

LINKING UP/ATTACHING GRAPHICS

1

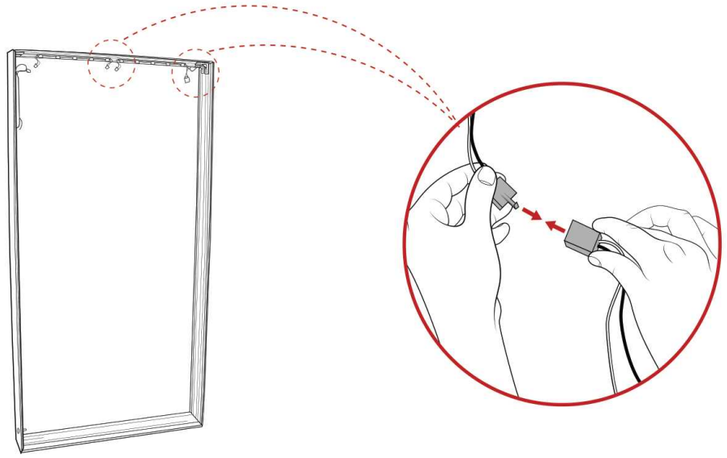

2

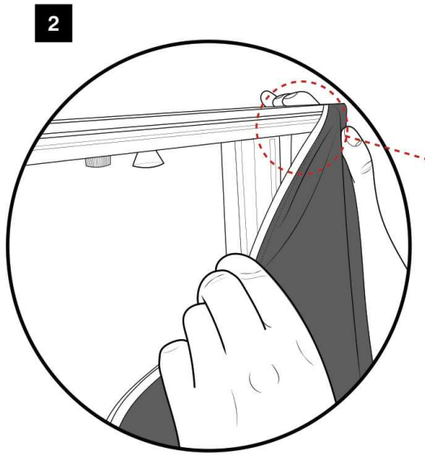

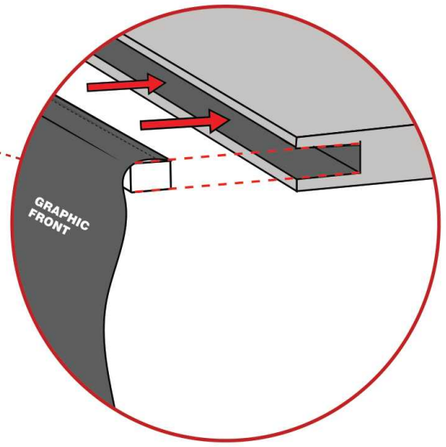

100MM, 125MM & 150MM LIGHTBOX - ASSEMBLY INSTRUCTION
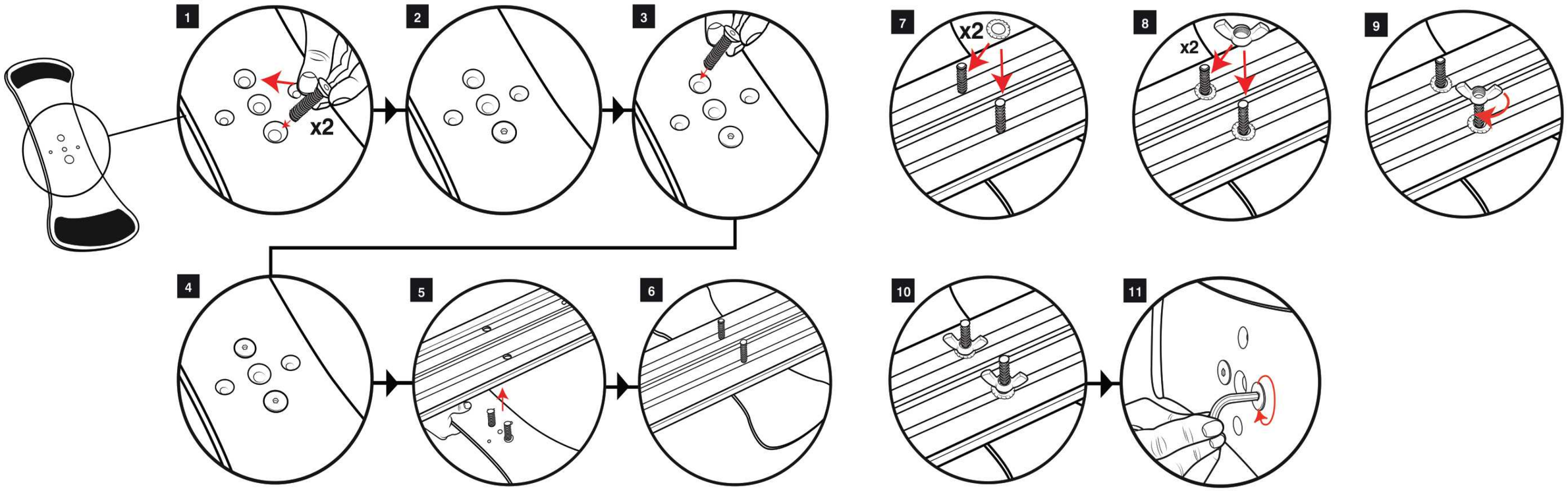
MOUNTING FRAME IN FREESTANDING POSITION WITH FEET