ILLUMIGO™ MODULAR

V2

The Illumigo Modular is a striking large-format illuminated display system, standing at 2389mm high and engineered for exceptional visual impact. Designed with flexibility in mind, it delivers seamless backlit SEG graphics across widths of up to 7.85 metres—making it a standout choice for retail spaces, exhibitions, and promotional environments, all without the premium price tag.

Product Specifications

- Free-standing double-sided white aluminium frame, 120 mm thick
- Pre-fitted horizontal LED lights
- Full feet included
- Internal reinforcement tubes
- Graphic attachment with SEG optional
- Nylon wheeled carry bag with foam insert for protection, carry handle and shoulder strap included

Features and Benefits

- Fast Tool-Free assembly: Push-fit frame system with pre-installed LED. Feet push in place and are held using thumbscrews.
- Available in 5 widths: 1850, 2850, 3850, 4850, 5850 mm
- Exceptional expandability: the frame can be extended using either 850 mm or 1000 mm extension pieces Perfect for wide-format lightbox applications. Expandable up to 7.85m maximum.
- Frames can be configured in T, L or U shapes (optional connectors)
- Half foot and blind foot available as optional accessories, depending on the chosen configuration
- Accessorisable structures: optional A4 literature holder

Frame

Pre-fitted Led lights

Wheeled carry bag

Recommanded Media

- Backlit fabric made with 3 x 12 mm SEG
- For double-sided printing, use 2 backlite graphics
  For single-sided printing, use 1 backlite graphic + 1 black back (black out)

The printing templates provided are for guidance only. They take into account internal processes which may vary depending on your equipment, materials and finishes. If you are printing your own material, it is your responsibility to test the compatibility of your media with the product before use.

We are continually improving and modifying our product range and reserve the right to vary the specifications without prior notice. All dimensions and weights quoted are approximate and we accept no responsibility for variance. E&OE.

ILLUMIGO™ MODULAR

Extensions : transformer information

Additional transformers are not included with the frames.
If you are planning an extension, additional transformers may be required.
The table below indicates the number of transformers required per width.

Frame width	Number of transformers
Up to 3m	1
Up to 4m	2
Up to 4,8m	3
From 4,85m to 7,85m	4

Hardware Information

Code	Description	Hardware assembled dimensions (mm) w x h x d	Hardware assembled weight*	Package dimensions (mm) h x w x d	Package weight
ILLGO-MOD-1824	Illumigo Modular 1850(w) x 2380(h)	1850 x 2389 x 590	22,7 kg	175 x 1450 x 450	24,8 kg
ILLGO-MOD-2824	Illumigo Modular 2850(w) x 2380(h)	2850 x 2389 x 590	29,1 kg	175 x 1450 x 500	31,31 kg
ILLGO-MOD-3824	Illumigo Modular 3850(w) x 2380(h)	3850 x 2389 x 590	36,8 kg	175 x 1450 x 450 + 75 x 1360 x 450	40,75 kg
ILLGO-MOD-4824	Illumigo Modular 4850(w) x 2380(h)	4850 x 2389 x 590	45,1 kg	175 x 1450 x 450 + 175 x 1360 x 450	49 kg
ILLGO-MOD-5824	Illumigo Modular 5850(w) x 2380(h)	5850 x 2389 x 590	51,6 kg	175 x 1450 x 450 + 175 x 2145 x 450	55,35 kg
ILLGO-MOD-EXT-0824	Illumigo Modular 850(w) x 2380(h)	850 x 2389 x 590	6,45 kg	170 x 1280 x 230	7,7 kg
ILLGO-MOD-EXT-1024	Illumigo Modular 1000(w) x 2380(h)	1000 x 2389 x 590	7 kg	180 x 1280 x 235	8,15 kg

*Without graphic

We are continually improving and modifying our product range and reserve the right to vary the specifications without prior notice. All dimensions and weights quoted are approximate and we accept no responsibility for variance. E&OE.

ILLUMIGO™ MODULAR

Hardware Information: components and lighting info

Code	Foot quantity	Rods quantity	Cross quantity	Bracket quantity	Transformer quantity	Input power	Output power	Kelvin	Lumens	Watts
ILLGO-MOD-1824	3	4	1	8	1	100-240v 50/60Hz 3.5A	24V 11A 264W	6500	24504	168
ILLGO-MOD-2824	4	7	2	10	1				38148	258
ILLGO-MOD-3824	5	10	3	12	2				51792	348
ILLGO-MOD-4824	6	13	4	14	4				65436	437
ILLGO-MOD-5824	7	16	5	16	4				79080	528
ILLGO-MOD-EXT-0824	1	2	1	2	0	N/A	N/A	N/A	N/A	N/A
ILLGO-MOD-EXT-1024	1	2	1	2	0	N/A	N/A	N/A	N/A	N/A

Standard foot

Rods

Cross

Bracket

Transformer

- Length from plug to transformer : 1790 mm
- Length from transformer to hardware : 1655 mm

ILLGO-MOD-1824

ILLGO-MOD-2824

ILLGO-MOD-3824

ILLGO-MOD-4824

ILLGO-MOD-5824

We are continually improving and modifying our product range and reserve the right to vary the specifications without prior notice. All dimensions and weights quoted are approximate and we accept no responsibility for variance. E&OE.

ILLUMIGO™ MODULAR

Connectors information (not included with the frame, please order separately)

90° configurations

90° Top corner connector:
ILLGO-90TC (sold per unit)

- Designed to join 2 frames at a 90°angle without any loss of space.
- For use only at the top of the frames
- **Must be completed with a blind foot** at the bottom (**ILLGO-MOD-BF,** sold separately).

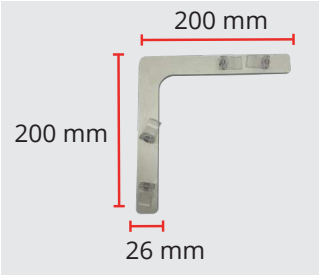

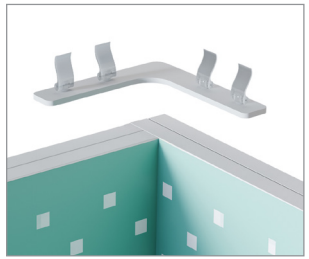

Top view

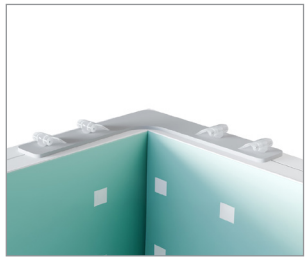

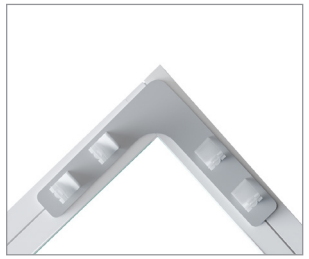

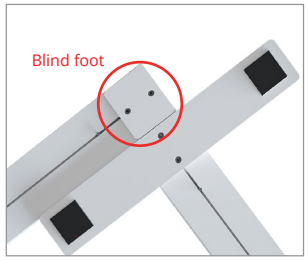

Bottom view

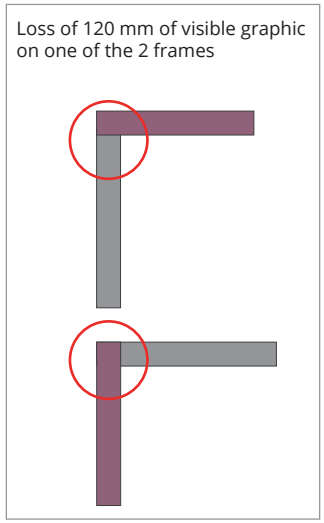

Diagram – Top view of frames

90° Middle inside corner connectors:
ILLGO-MOD-90MIC (4 included)

- Designed to connect 2 frames at a 90° angle.
- Used on the vertical edge of the frames.
- **Must be completed with an blind foot** at the bottom (**ILLGO-MOD-BF,** sold separately).

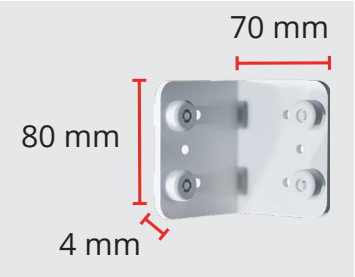

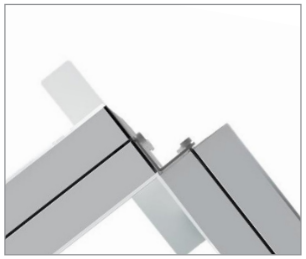

Top view

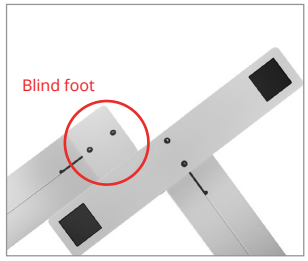

Bottom view

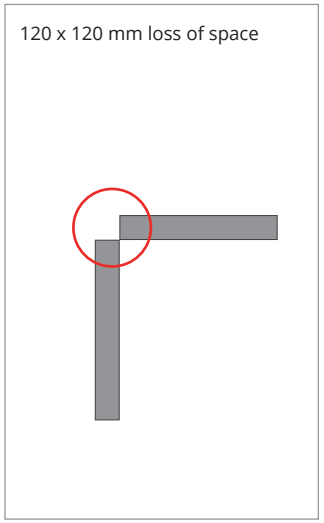

Diagram – Top view of frames

We are continually improving and modifying our product range and reserve the right to vary the specifications without prior notice. All dimensions and weights quoted are approximate and we accept no responsibility for variance. E&OE.

ILLUMIGO™ MODULAR

Connectors information (not included with the frame, please order separately)

T-shape configurations

T-shape connector:
ILLGO-TC (sold per unit)

- Designed to connect 2 or 3 frames in a T-shape.
- For use only at the top of the frames.
- **Can be completed with a blind foot at the bottom**, depending on the desired configuration (**ILLGO-MOD-BF**, sold separately).

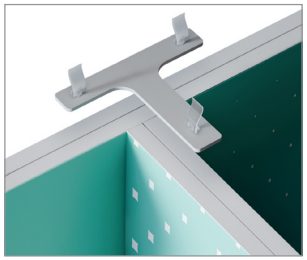

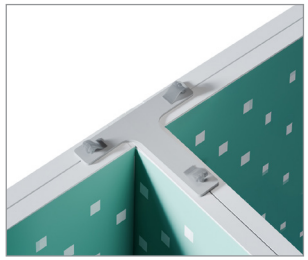

Top view

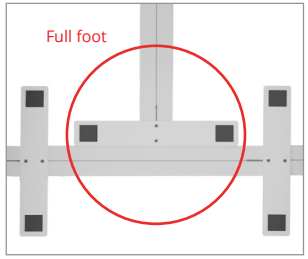

Bottom view
Option 01

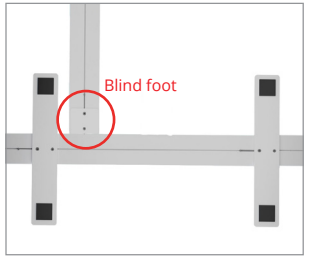

Bottom view
Option 02

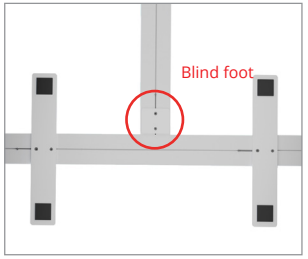

Bottom view
Option 03

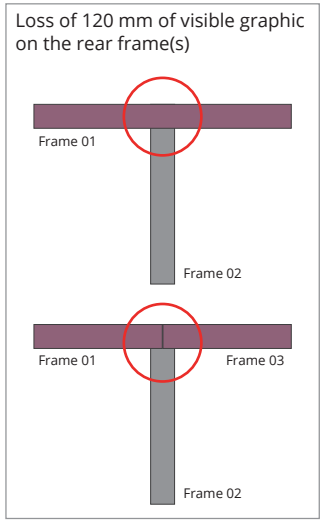

Diagram – Top view of frames

We are continually improving and modifying our product range and reserve the right to vary the specifications without prior notice. All dimensions and weights quoted are approximate and we accept no responsibility for variance. E&OE.

ILLUMIGO™ MODULAR

Feet information (not included with the frame, please order separately)

Half Foot

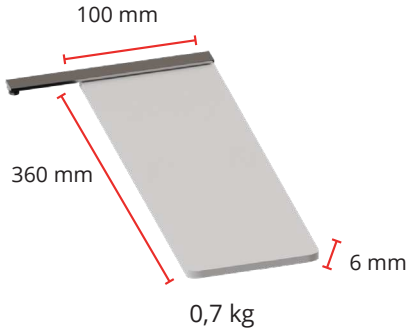

=> Ideal when the frame is used against a wall (maximise space)

Blind Foot

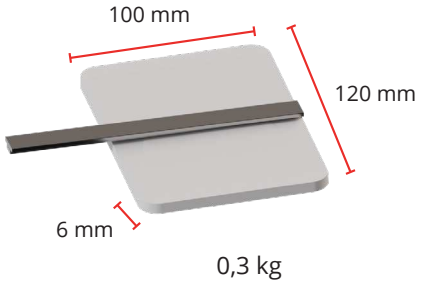

=> Required when 2 frames are assembled at a 90° angle or sometimes in a T-shape.
It replaces the corner foot of one of the frames to allow the 2 frames to be connected (see connectors page).

We are continually improving and modifying our product range and reserve the right to vary the specifications without prior notice. All dimensions and weights quoted are approximate and we accept no responsibility for variance. E&OE.

ILLUMIGO™ MODULAR

Literature holder information (not included with the frame, please order separately)

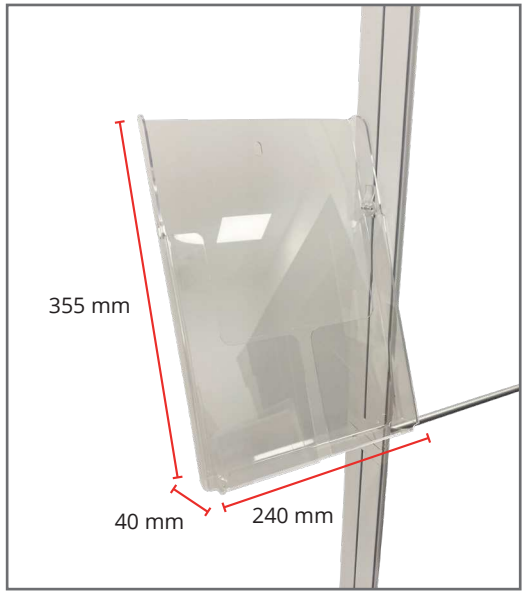

- Acrylic literature holder for A4 documents
- Attaches into the channel profile
- It can be mounted in two ways:
  - **Option 1**: from the side of the document holder
  - **Option 2**: from the back of the document holder
- Maximum load: 1.1 kg
- For frame stability, install no more than two holders per frame.

Code	Description	Assembled dimensions (mm) w x h x d	Net weight
ILLGO-LH-A4	A4 literature holder	240 x 355 x 40	0,41 kg

We are continually improving and modifying our product range and reserve the right to vary the specifications without prior notice. All dimensions and weights quoted are approximate and we accept no responsibility for variance. E&OE.

Assembly of the hardware and graphic

1

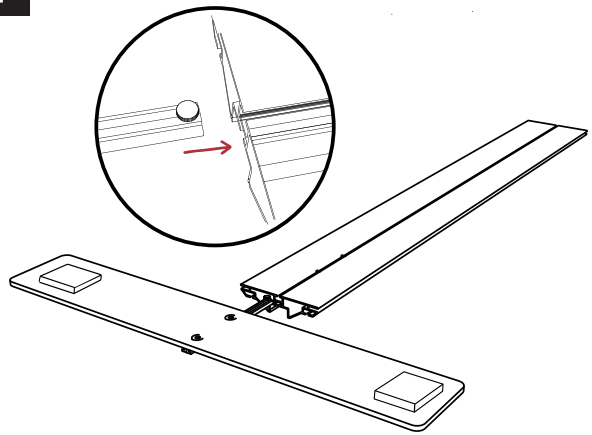

2

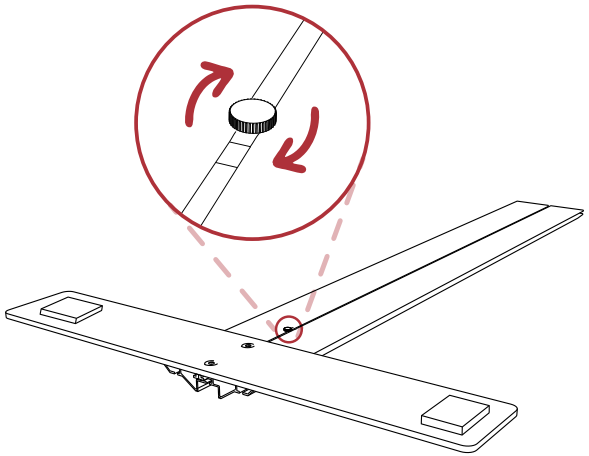

3

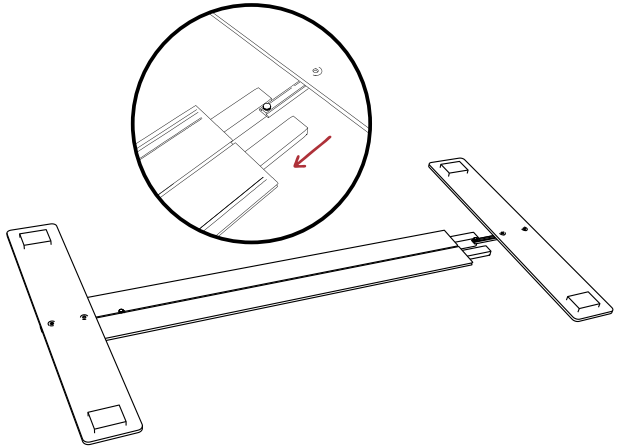

4

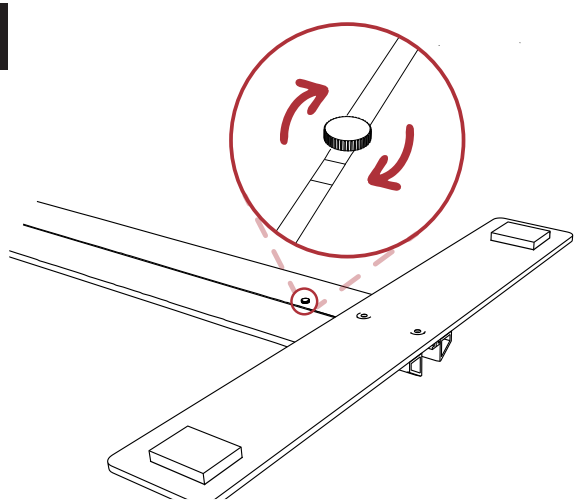

5

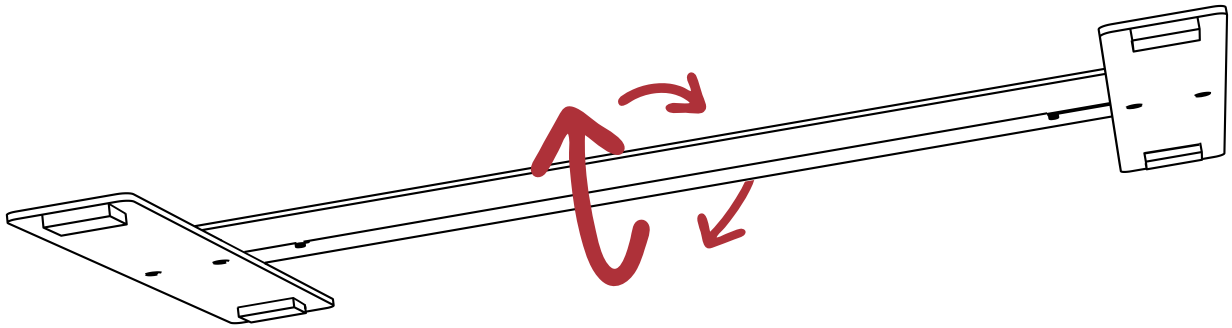

We are continually improving and modifying our product range and reserve the right to vary the specifications without prior notice. All dimensions and weights quoted are approximate and we accept no responsibility for variance. E&OE.

Assembly of the hardware and graphic

6

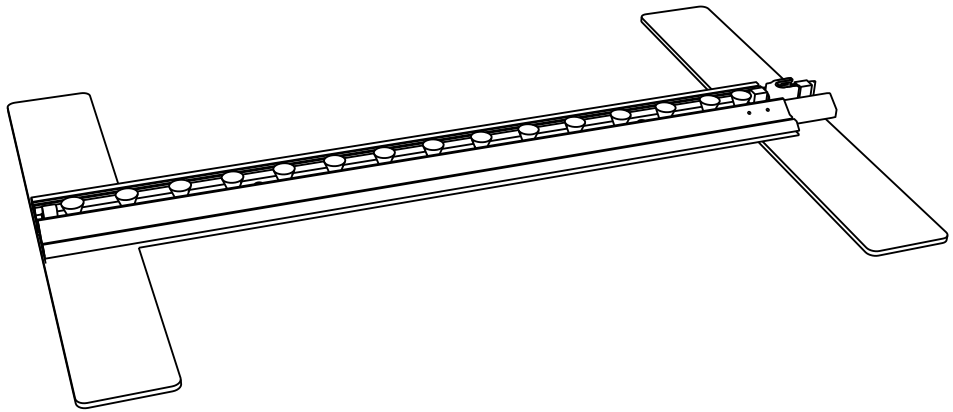

7 **Assemble a third foot with its section**

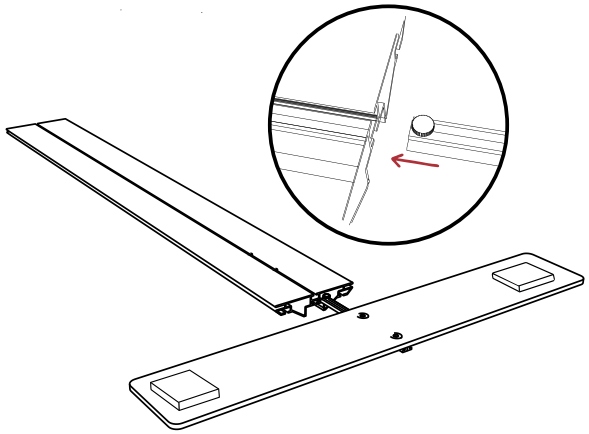

8

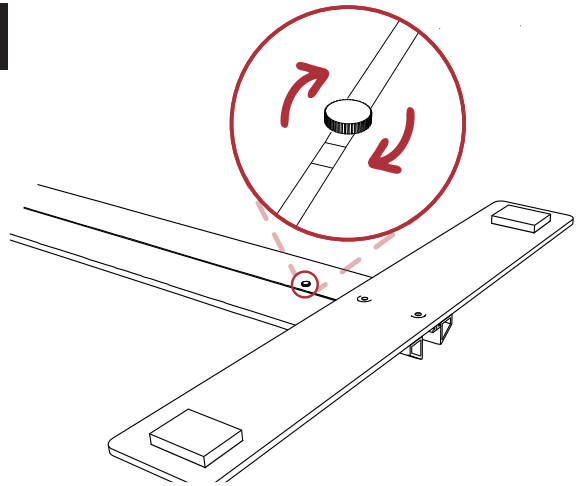

9

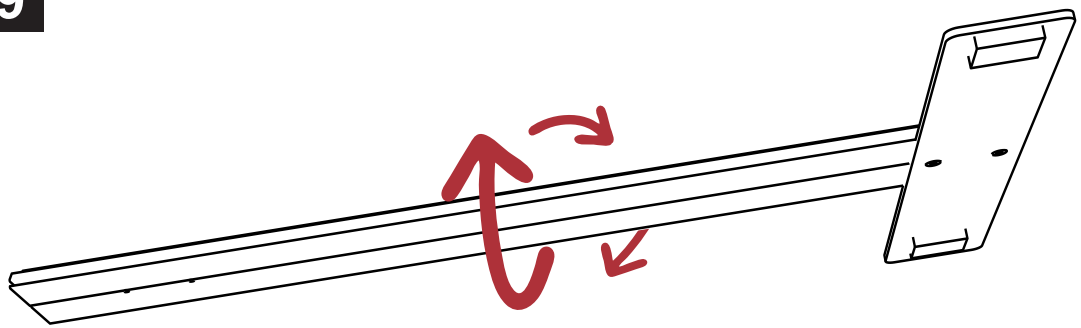

For larger sizes, repeat steps 1–9 for all remaining feet

We are continually improving and modifying our product range and reserve the right to vary the specifications without prior notice. All dimensions and weights quoted are approximate and we accept no responsibility for variance. E&OE.

Assembly of the hardware and graphic

10

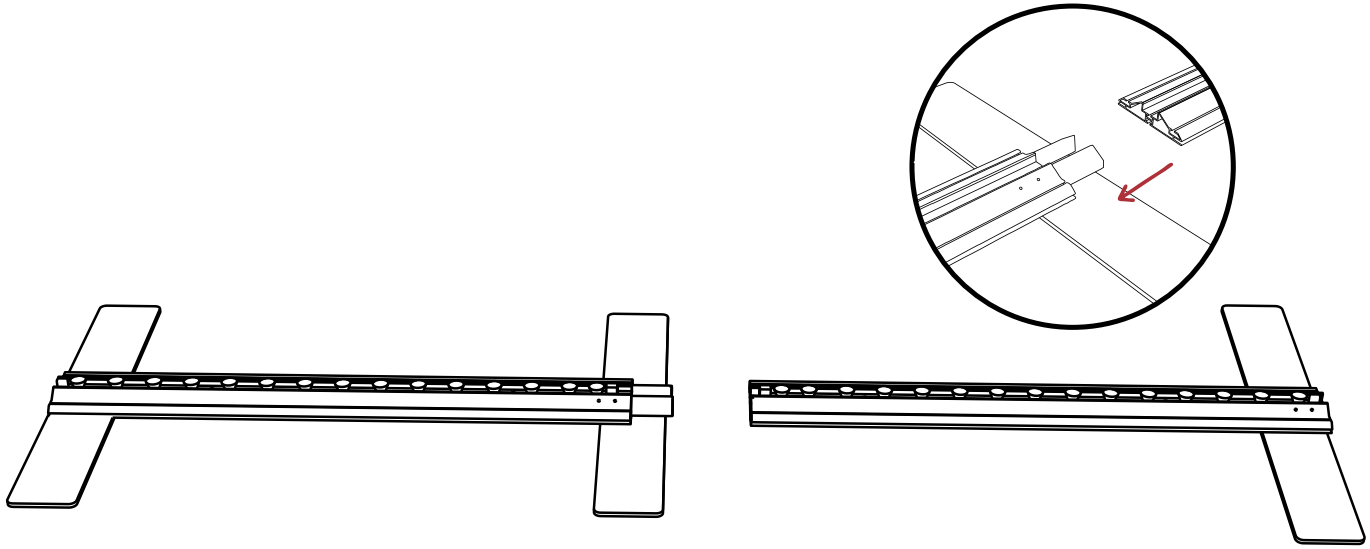

11

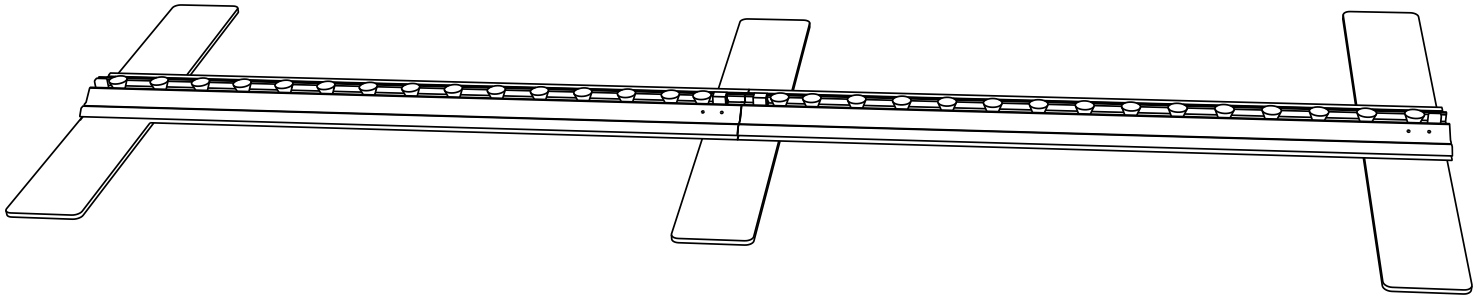

We are continually improving and modifying our product range and reserve the right to vary the specifications without prior notice. All dimensions and weights quoted are approximate and we accept no responsibility for variance. E&OE.

Assembly of the hardware and graphic

12

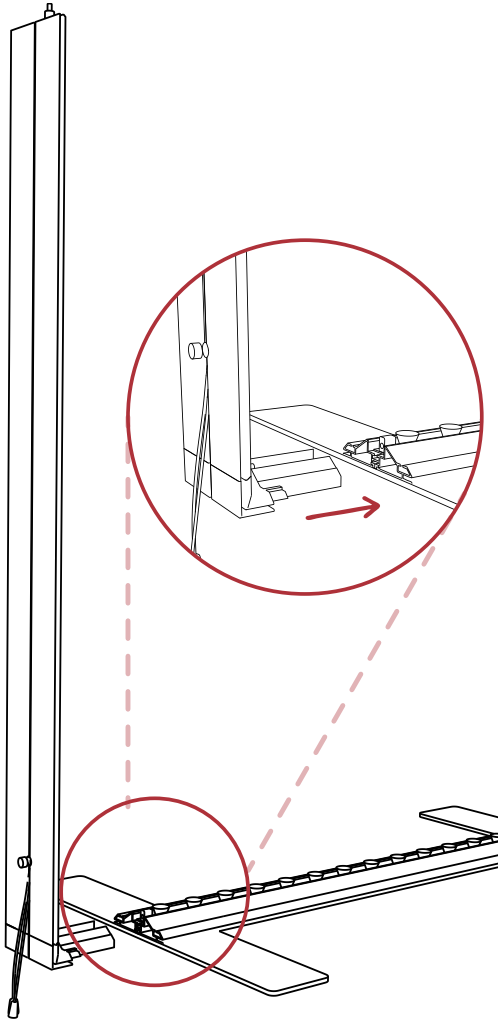

13

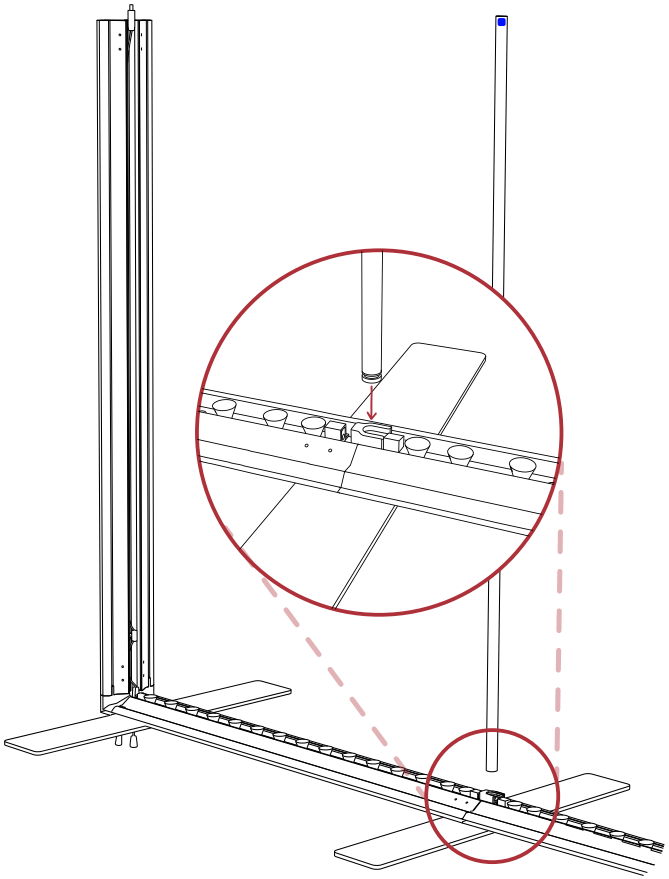

14

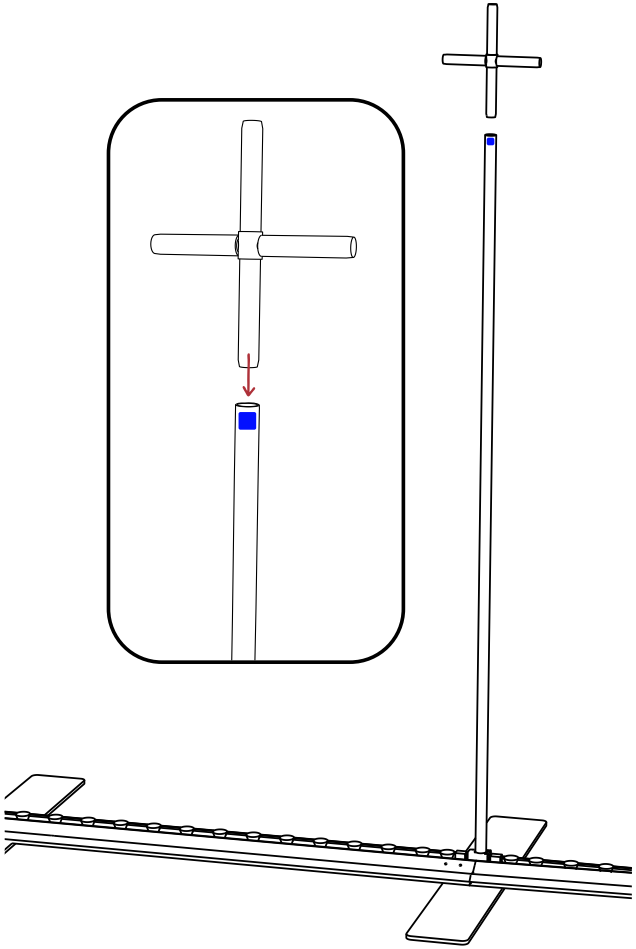

We are continually improving and modifying our product range and reserve the right to vary the specifications without prior notice. All dimensions and weights quoted are approximate and we accept no responsibility for variance. E&OE.

Assembly of the hardware and graphic

15

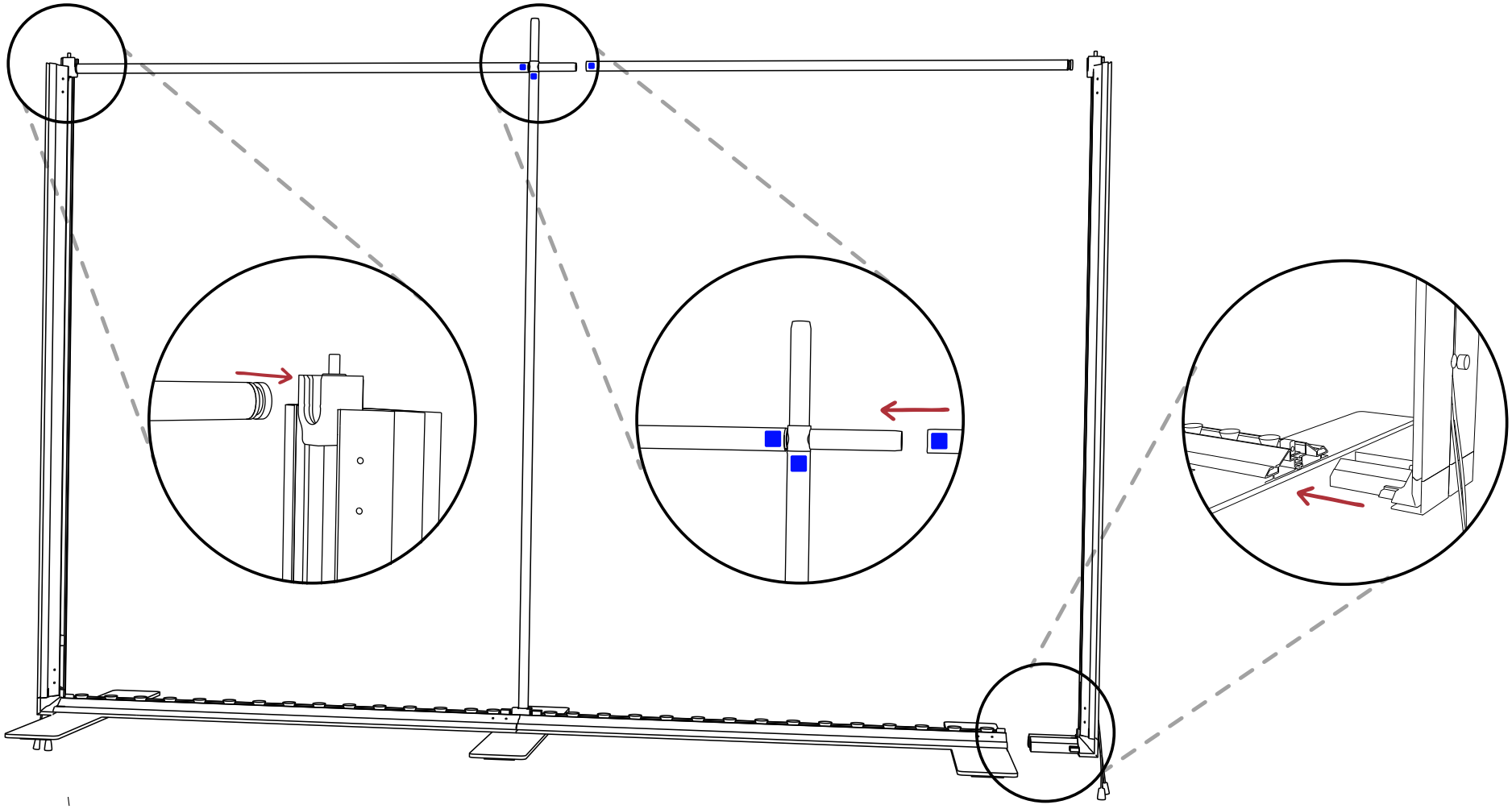

We are continually improving and modifying our product range and reserve the right to vary the specifications without prior notice. All dimensions and weights quoted are approximate and we accept no responsibility for variance. E&OE.

Assembly of the hardware and graphic

16

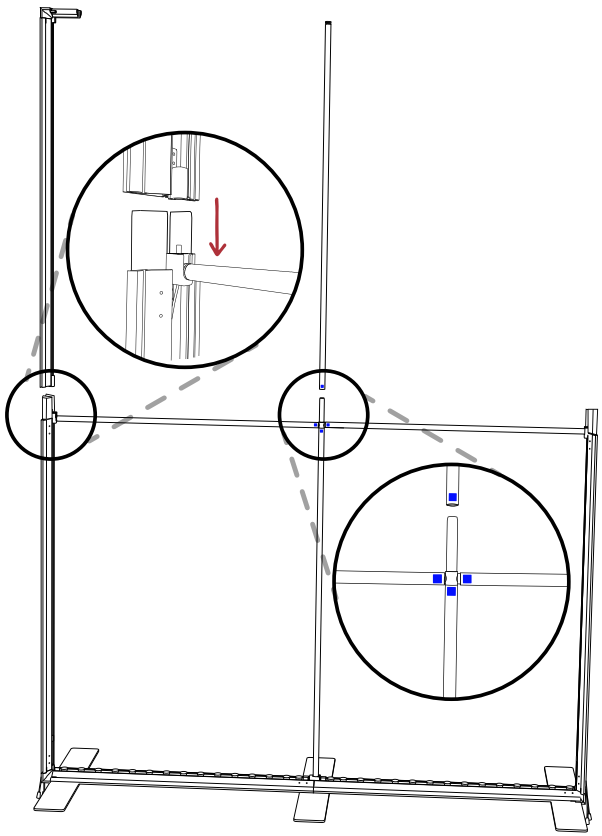

17

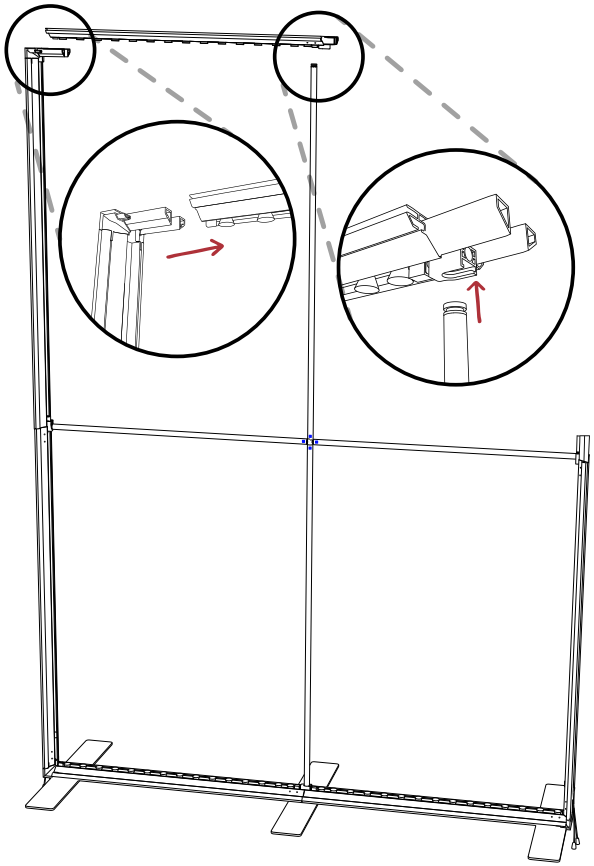

18

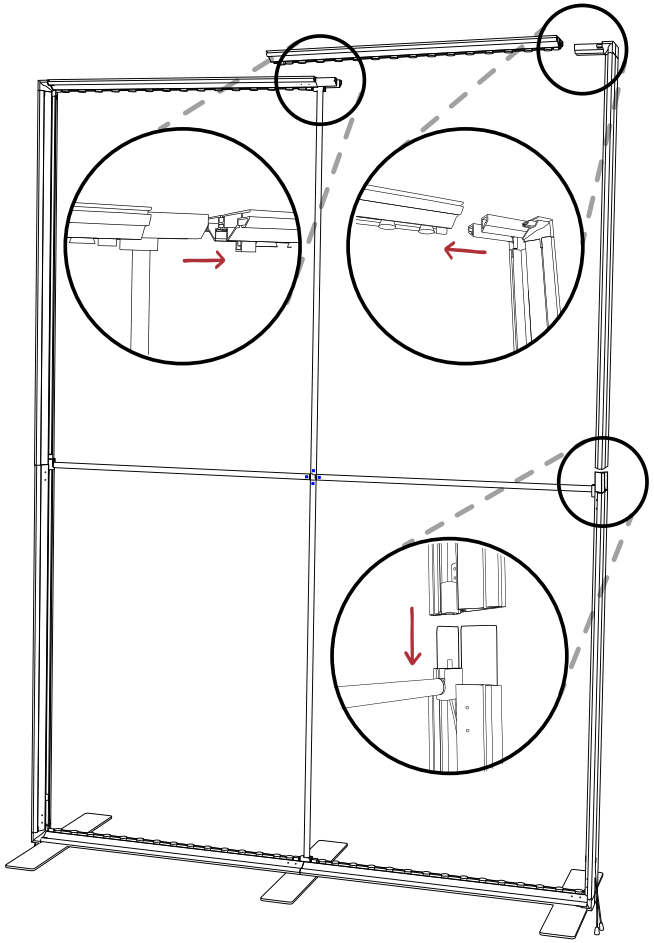

We are continually improving and modifying our product range and reserve the right to vary the specifications without prior notice. All dimensions and weights quoted are approximate and we accept no responsibility for variance. E&OE.

Assembly of the hardware and graphic

19

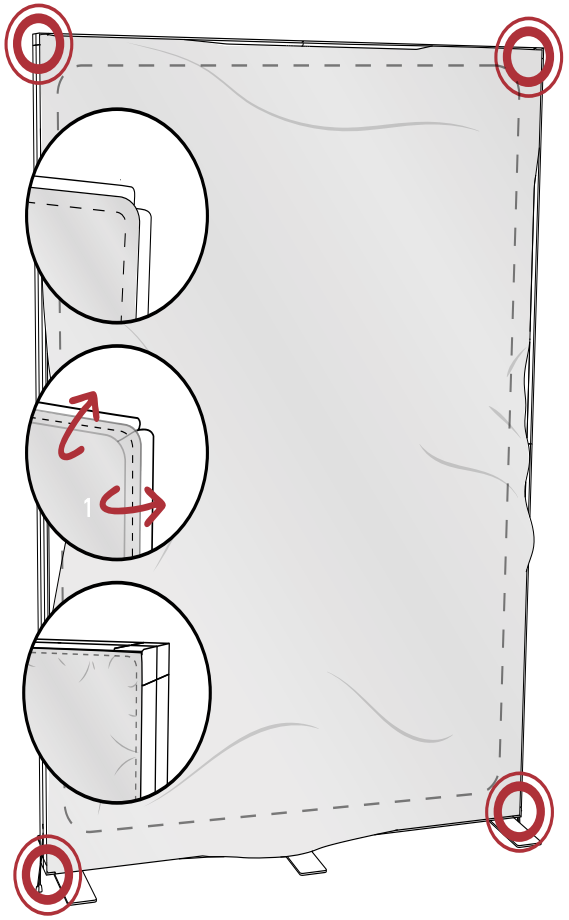

20

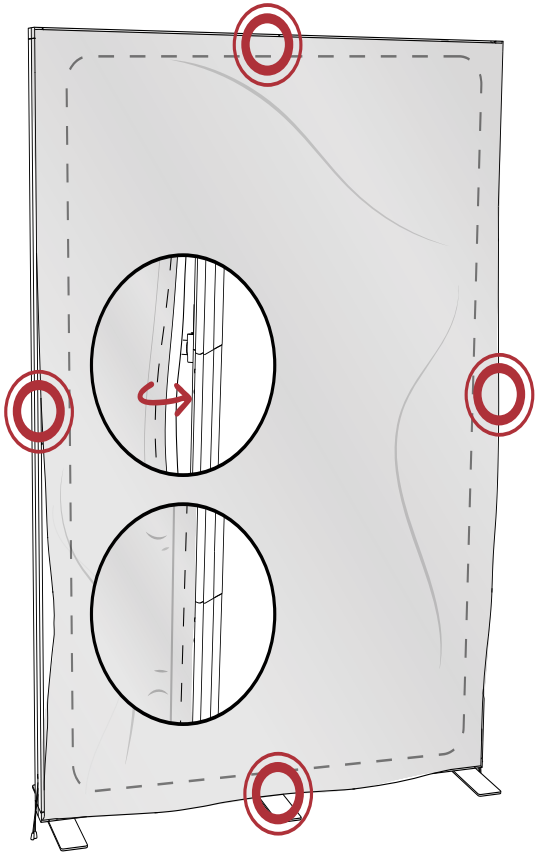

21

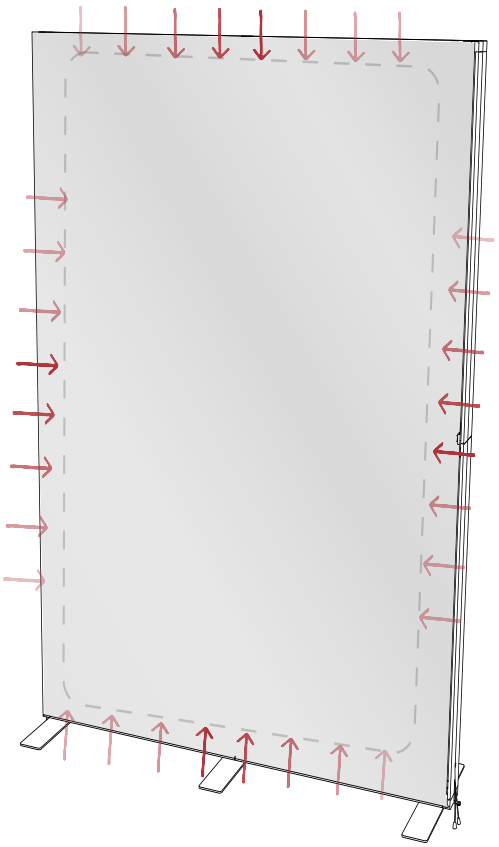

We are continually improving and modifying our product range and reserve the right to vary the specifications without prior notice. All dimensions and weights quoted are approximate and we accept no responsibility for variance. E&OE.

Assembly of the Extension

1

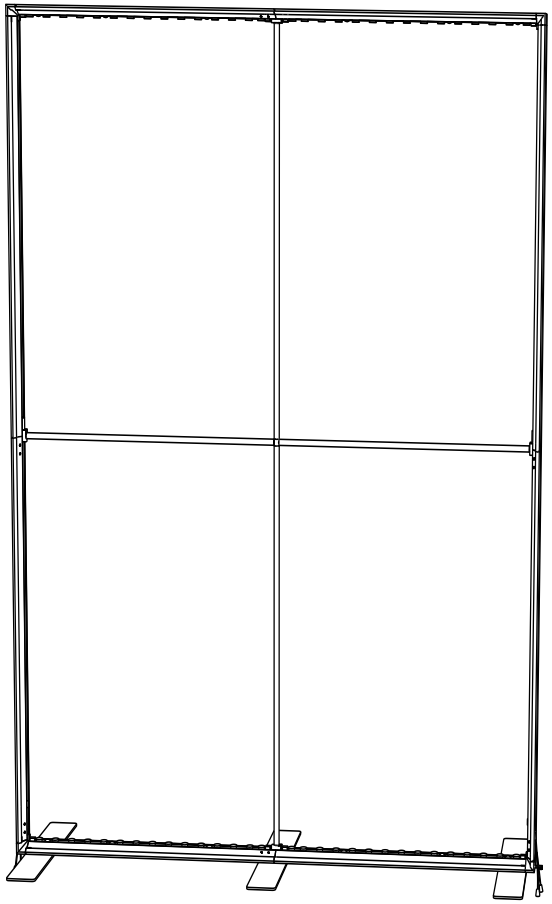

2

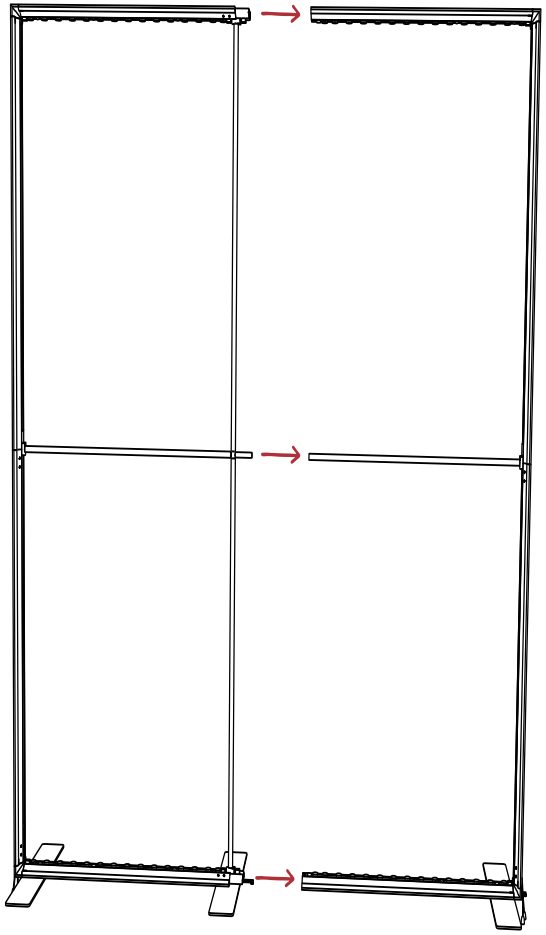

3

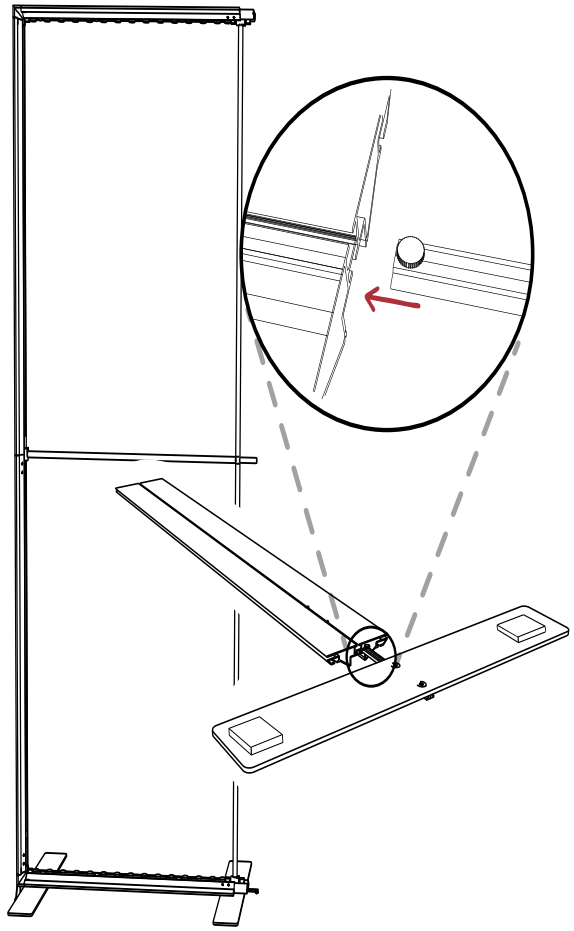

We are continually improving and modifying our product range and reserve the right to vary the specifications without prior notice. All dimensions and weights quoted are approximate and we accept no responsibility for variance. E&OE.

Assembly of the Extension

4

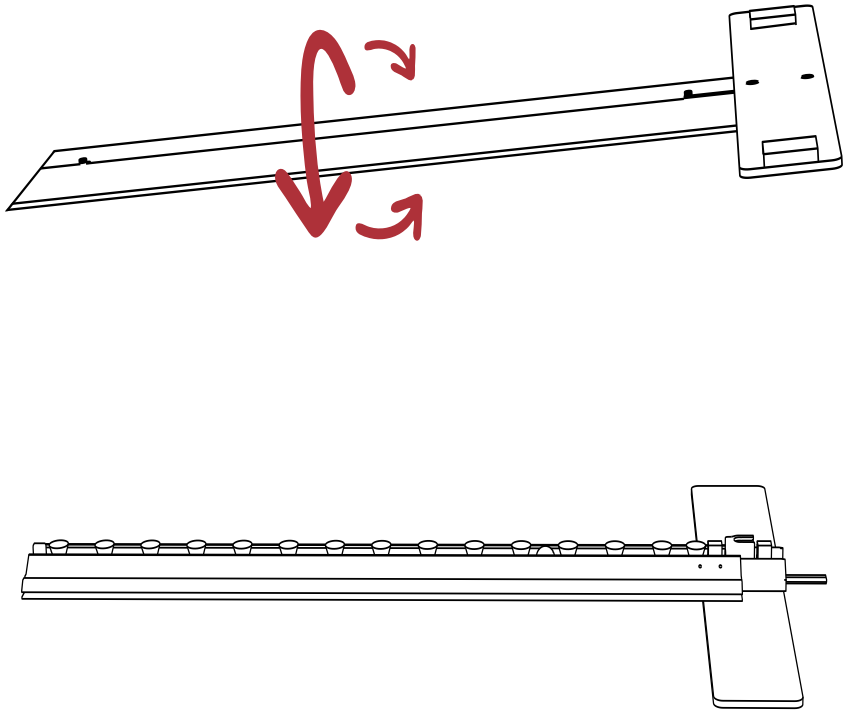

5

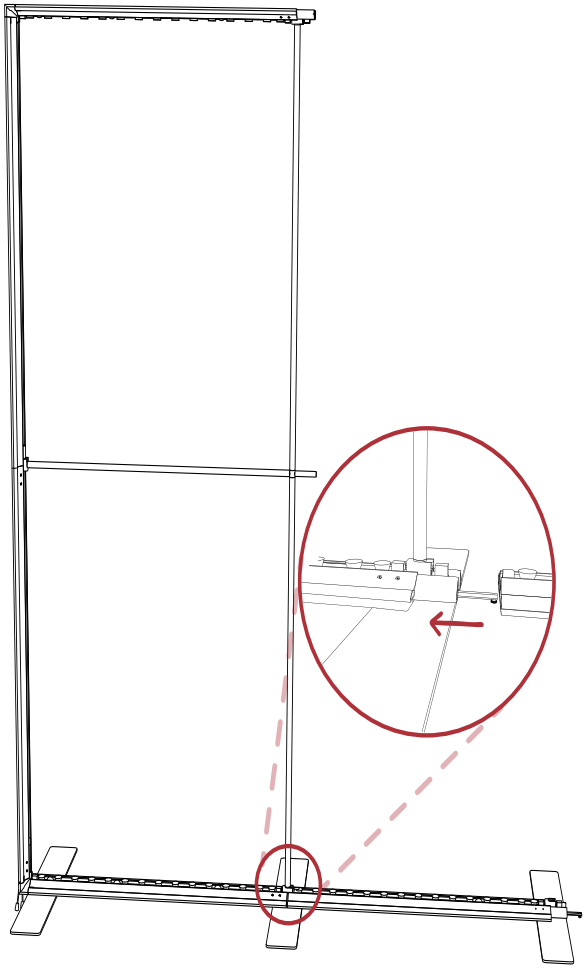

We are continually improving and modifying our product range and reserve the right to vary the specifications without prior notice. All dimensions and weights quoted are approximate and we accept no responsibility for variance. E&OE.

Assembly of the Extension

6

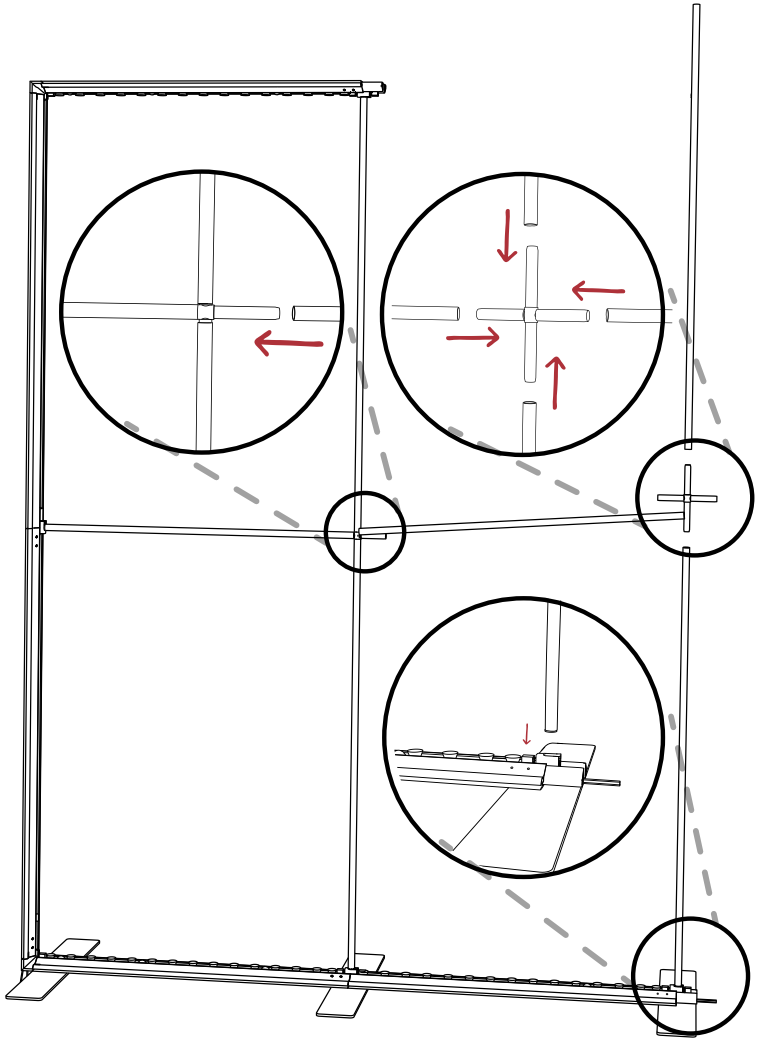

7

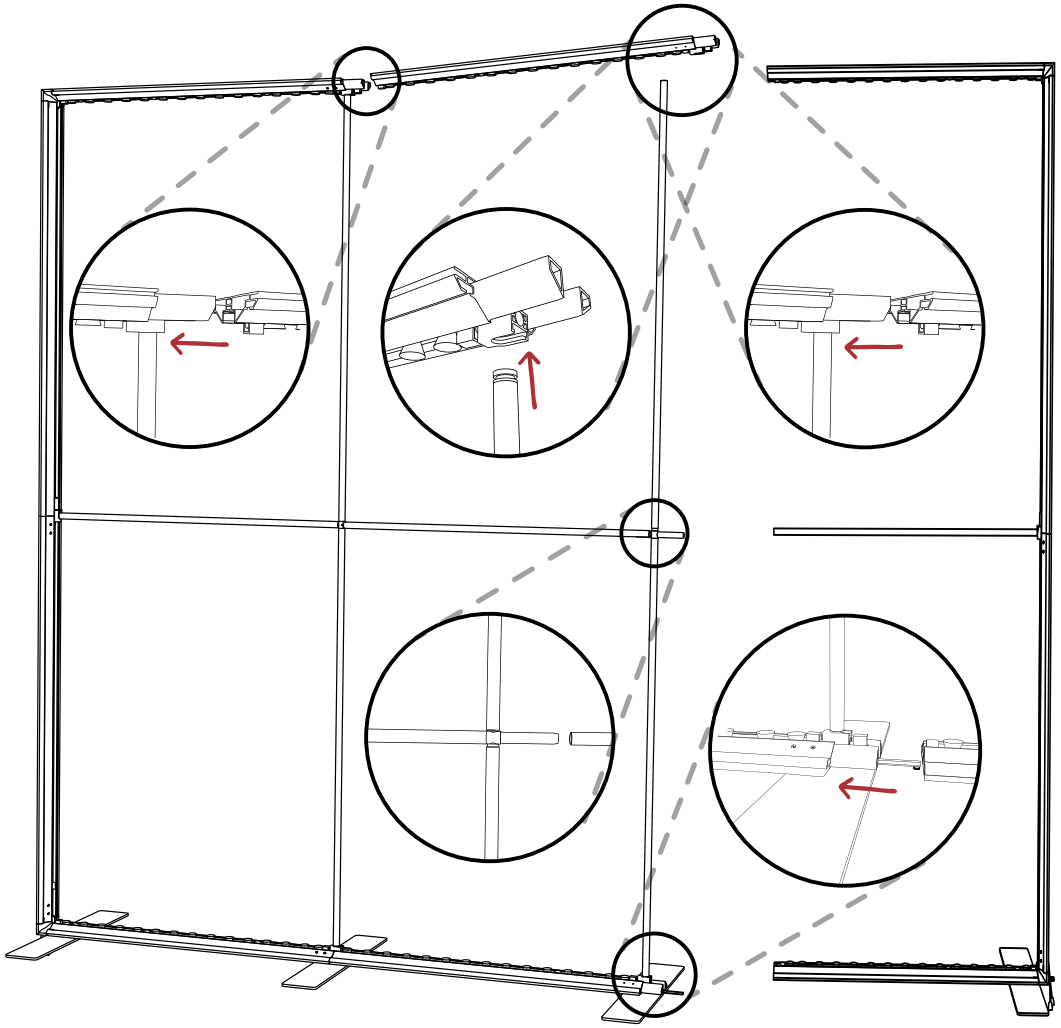

We are continually improving and modifying our product range and reserve the right to vary the specifications without prior notice. All dimensions and weights quoted are approximate and we accept no responsibility for variance. E&OE.

Assembly of the Extension

8

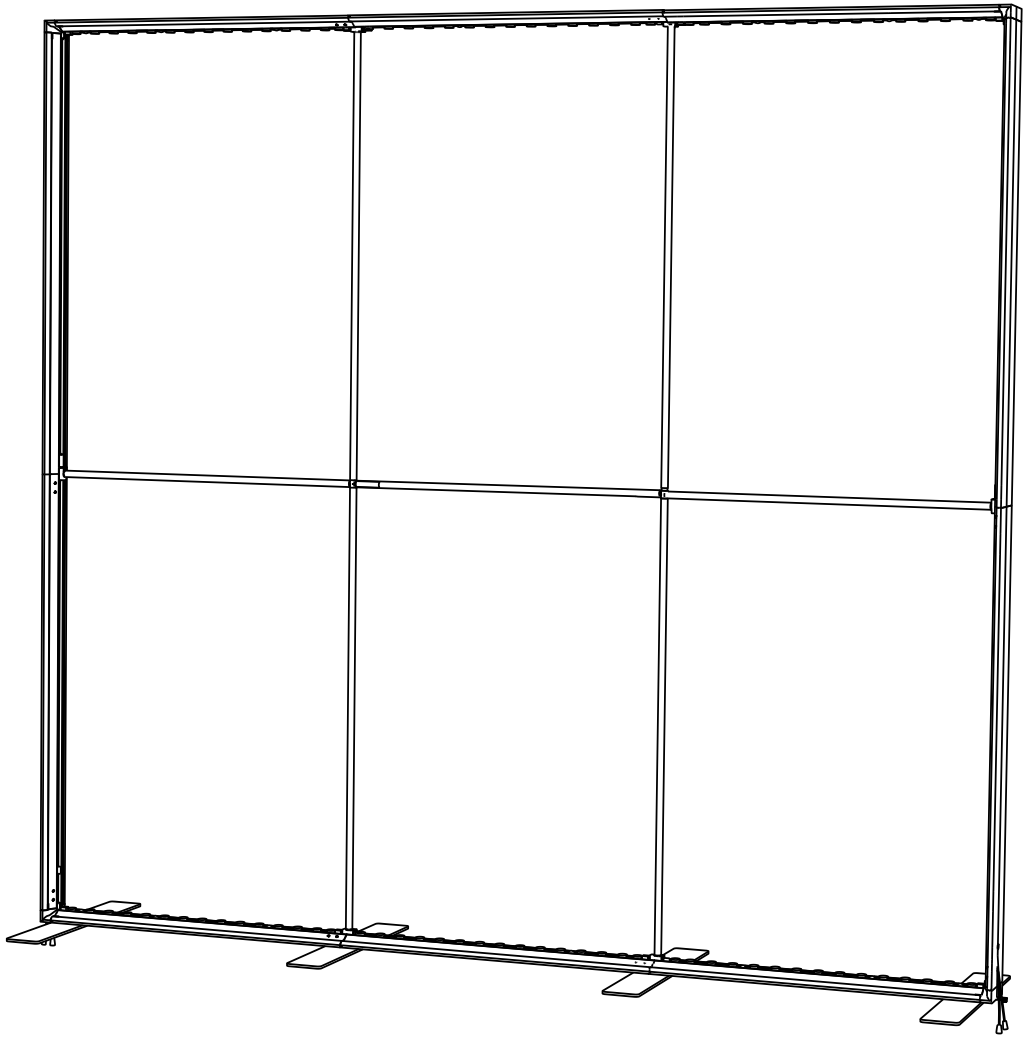

We are continually improving and modifying our product range and reserve the right to vary the specifications without prior notice. All dimensions and weights quoted are approximate and we accept no responsibility for variance. E&OE.

ILLUMIGO™ MODULAR

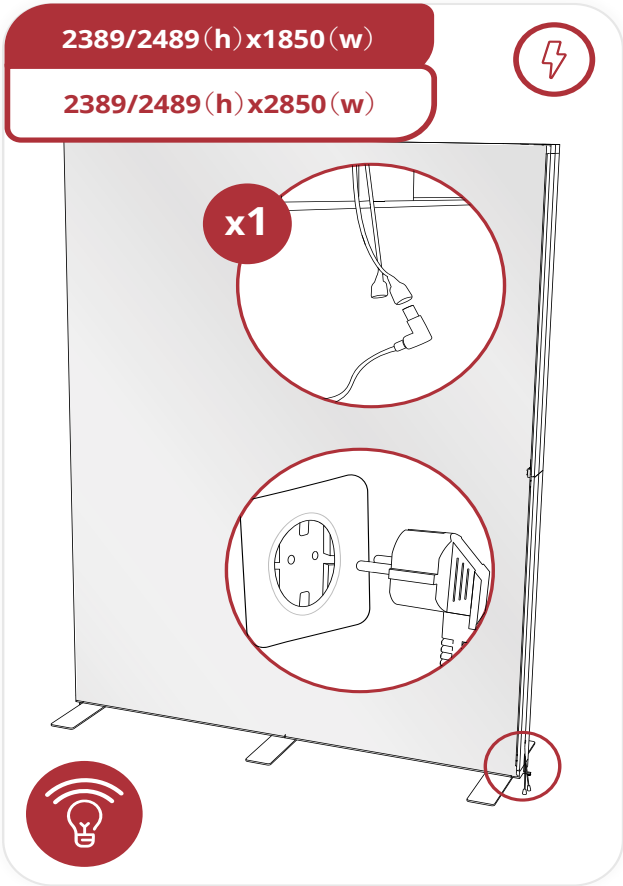

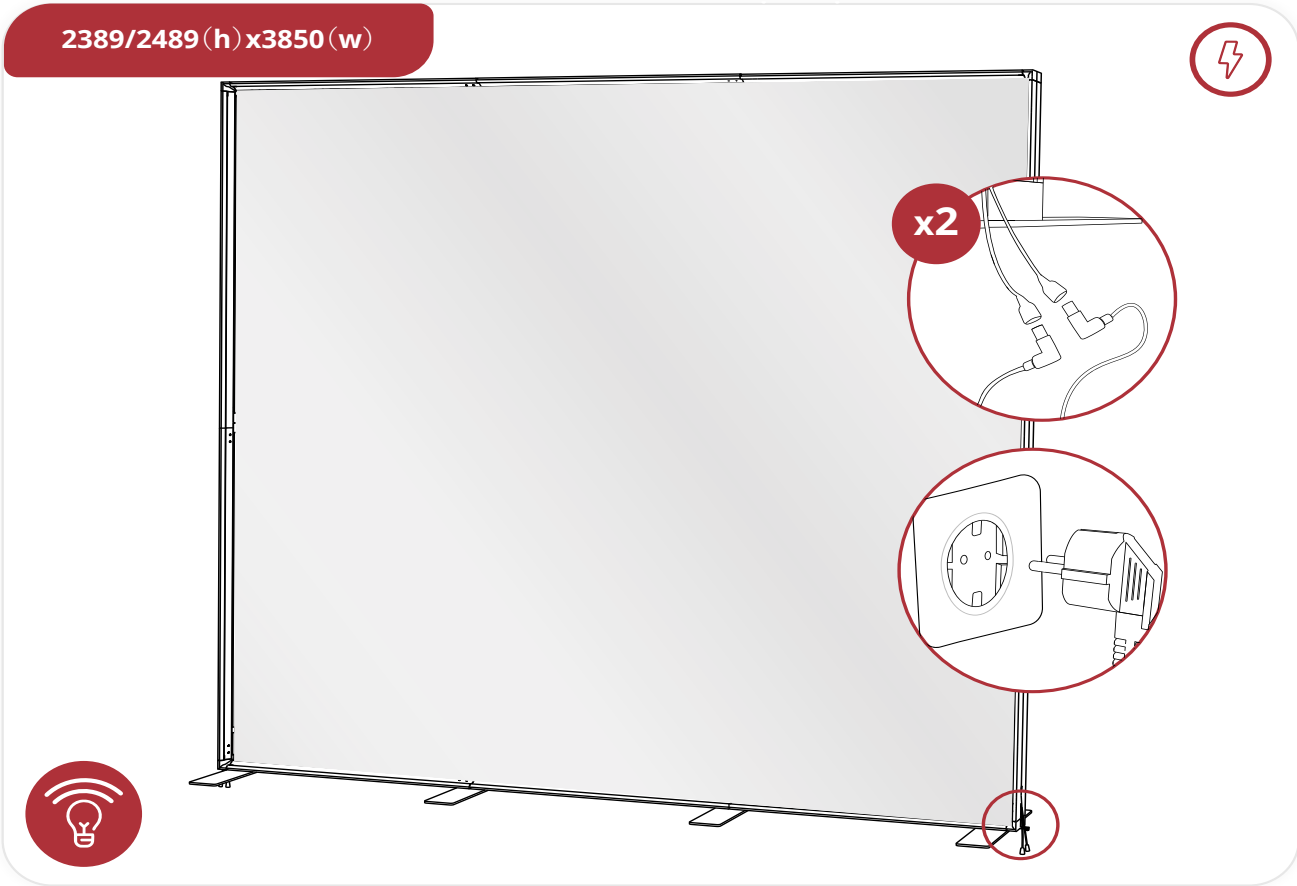

We are continually improving and modifying our product range and reserve the right to vary the specifications without prior notice. All dimensions and weights quoted are approximate and we accept no responsibility for variance. E&OE.

ILLUMIGO™ MODULAR

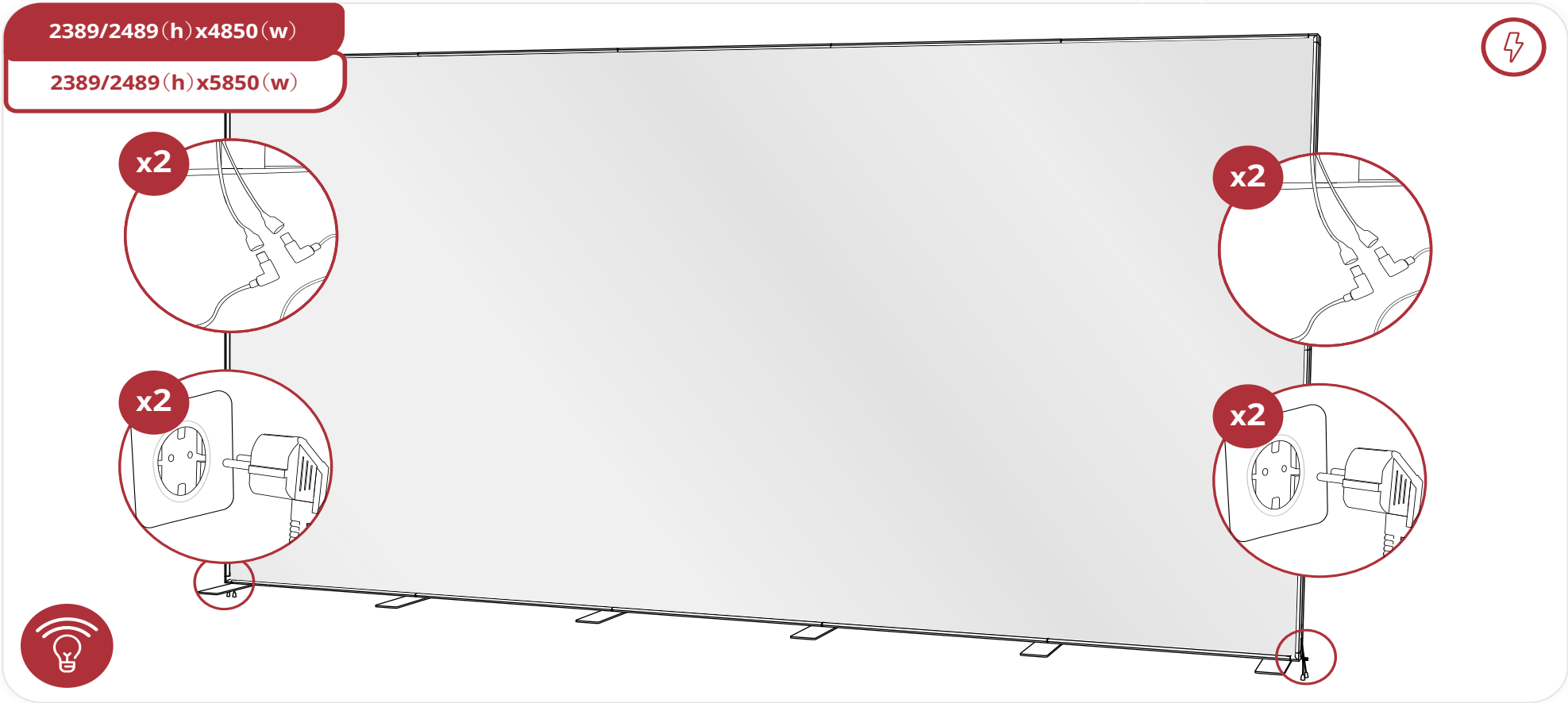

We are continually improving and modifying our product range and reserve the right to vary the specifications without prior notice. All dimensions and weights quoted are approximate and we accept no responsibility for variance. E&OE.

ILLUMIGO™ MODULAR

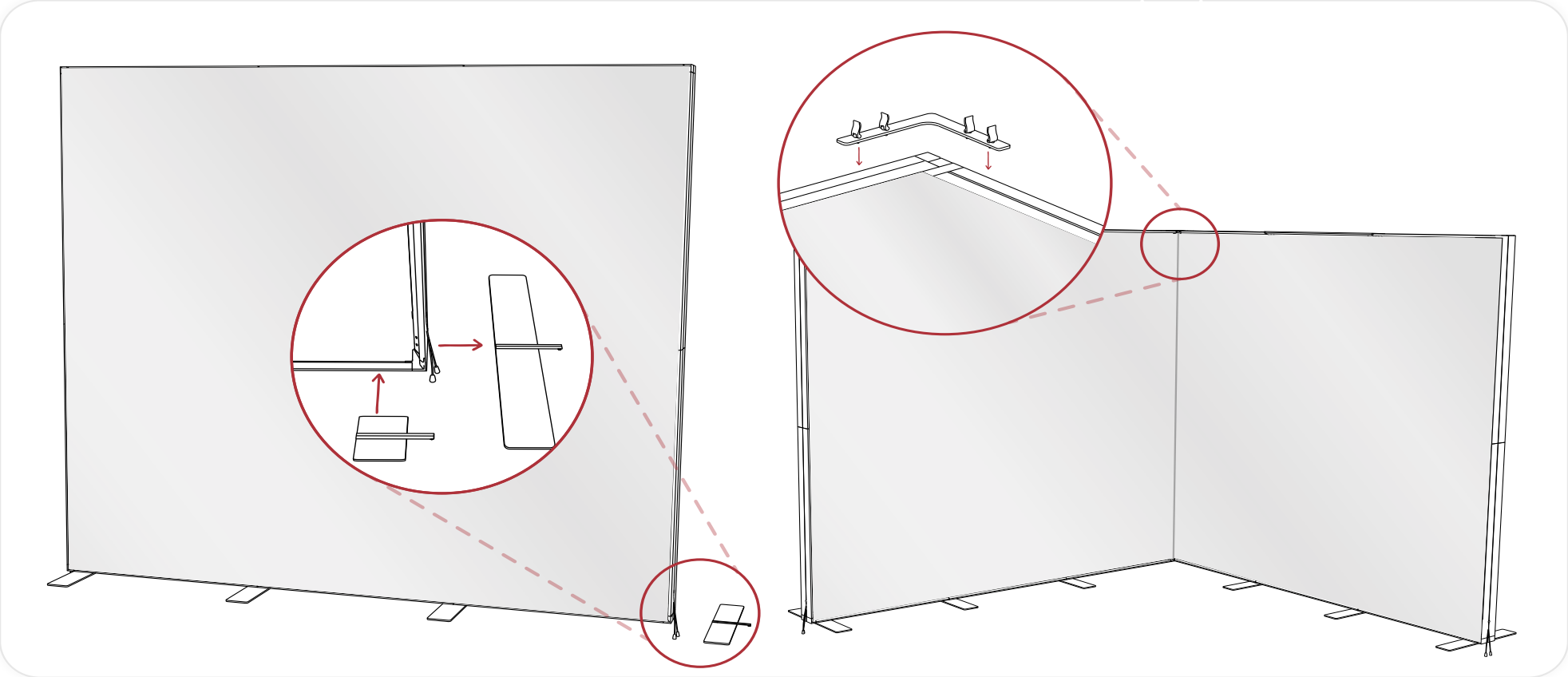

We are continually improving and modifying our product range and reserve the right to vary the specifications without prior notice. All dimensions and weights quoted are approximate and we accept no responsibility for variance. E&OE.

ILLUMIGO™ MODULAR

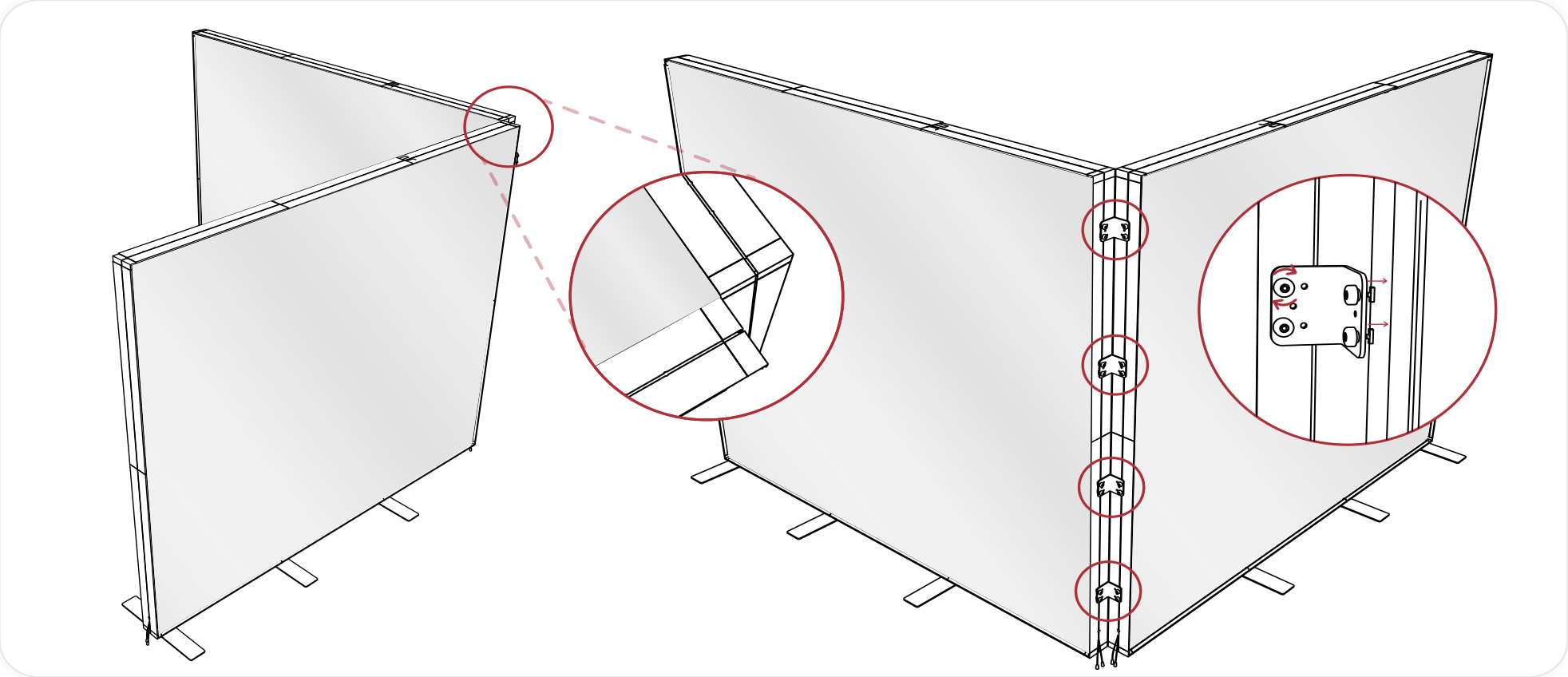

We are continually improving and modifying our product range and reserve the right to vary the specifications without prior notice. All dimensions and weights quoted are approximate and we accept no responsibility for variance. E&OE.

ILLUMIGO™ MODULAR

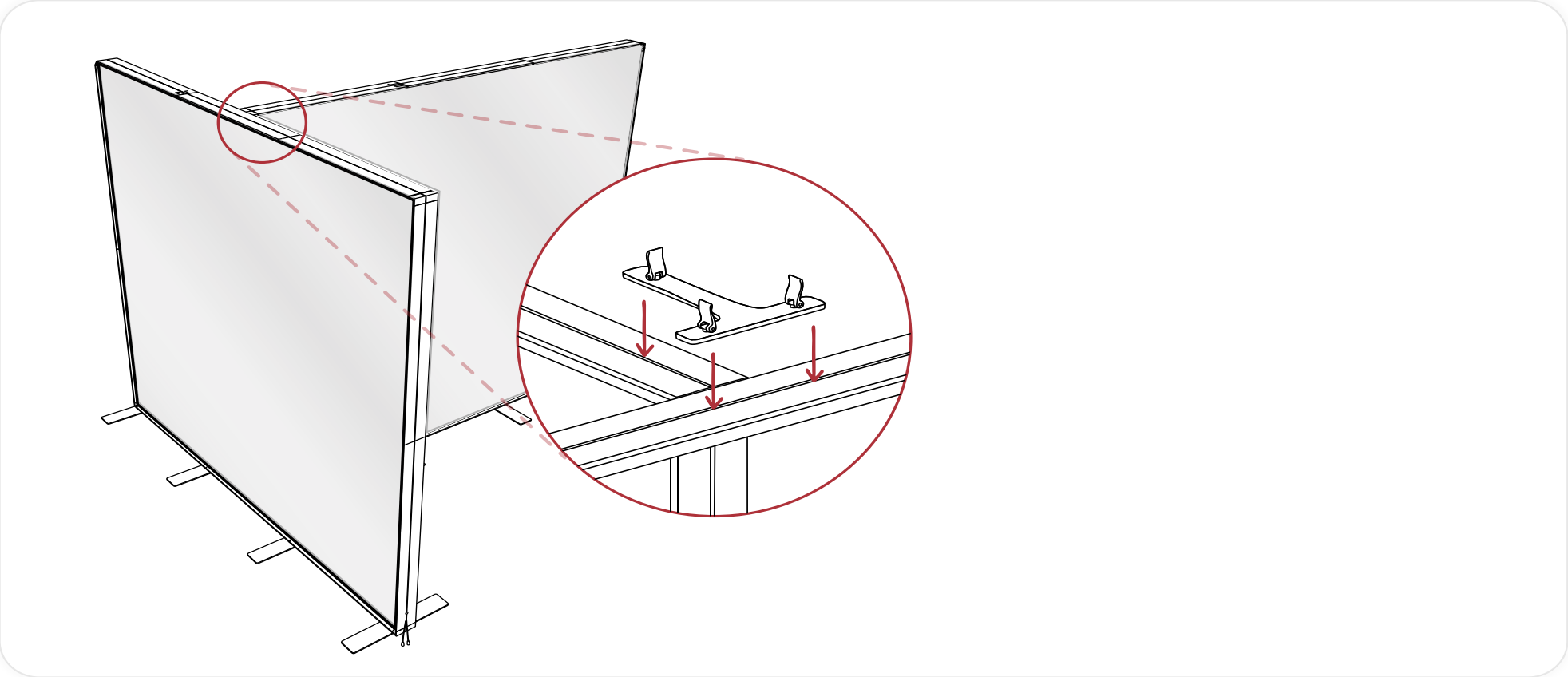

We are continually improving and modifying our product range and reserve the right to vary the specifications without prior notice. All dimensions and weights quoted are approximate and we accept no responsibility for variance. E&OE.