FORMULATE OVAL COUNTER

Lightweight but robust Formulate counter, ideal for promotional or exhibition applications. Display your message at 360° angle with optional washable tension fabric graphic.

Hardware

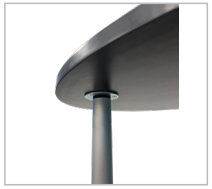

Screw fitting

SEG Graphic

Product Specifications

- Anodised aluminium tubular structure (3 vertical support poles in 2 sections - Ø 30mm)
- Black MDF top and base (thickness: 20mm) with a 3mm channel
- Maximum top load bearing: 50kg to be distributed
- Graphic attachment with SEG optional. Graphic with a vertical zip on the back
- Nylon carry bag included (with internal flap for the graphic)

Features and Benefits

- Quick and easy to assemble (tool free):
  - Bungeed tubes
  - Tubes screw into the underside of both the base and top of the counter
- Internal storage space
- Strong structure
- Invisible structure
- 360° communication

Recommanded Media

- Slightly stretch graphic, made with 3 x 12 mm SEG

The printing templates provided are for guidance only. They take into account internal processes which may vary depending on your equipment, materials and finishes. If you are printing your own material, it is your responsibility to test the compatibility of your media with the product before use.

We are continually improving and modifying our product range and reserve the right to vary the specifications without prior notice. All dimensions and weights quoted are approximate and we accept no responsibility for variance. E&OE.

FORMULATE OVAL COUNTER

V1

Hardware Information

Code	Description	Hardware assembled dimensions (mm) w x h x d	Hardware assembled weight*	Package dimensions (mm) h x w x d	Package weight
FORM-OVAL-CNTR	Formulate Oval Counter	565 x 1020 x 397	6,5 kg	125 x 670 x 465	7,33 kg

*Without graphic

We are continually improving and modifying our product range and reserve the right to vary the specifications without prior notice. All dimensions and weights quoted are approximate and we accept no responsibility for variance. E&OE.

FORMULATE OVAL COUNTER

Assembly of the hardware and graphic

1

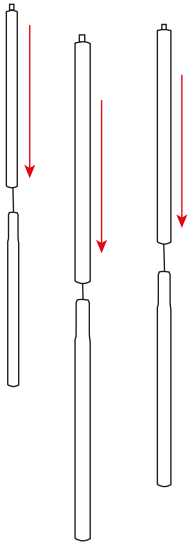

2

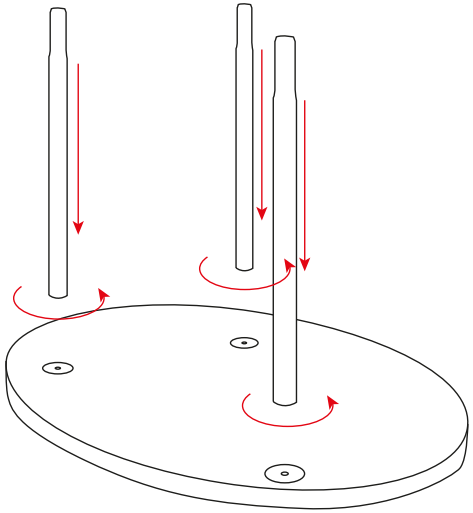

3

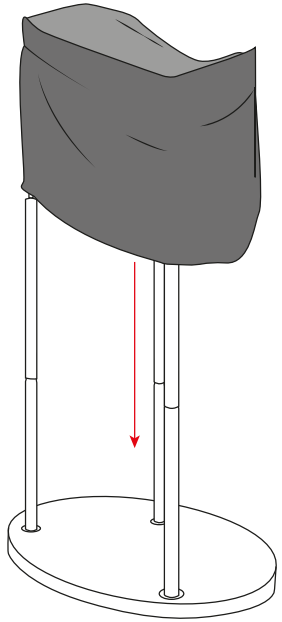

4

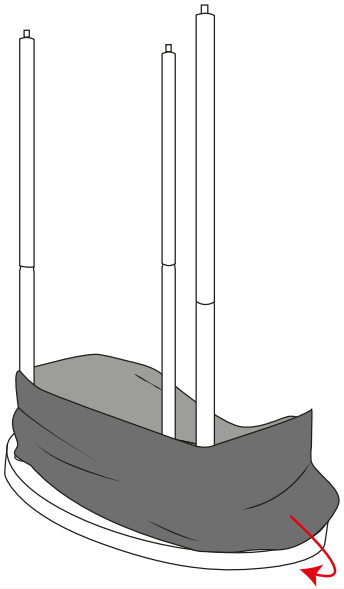

5

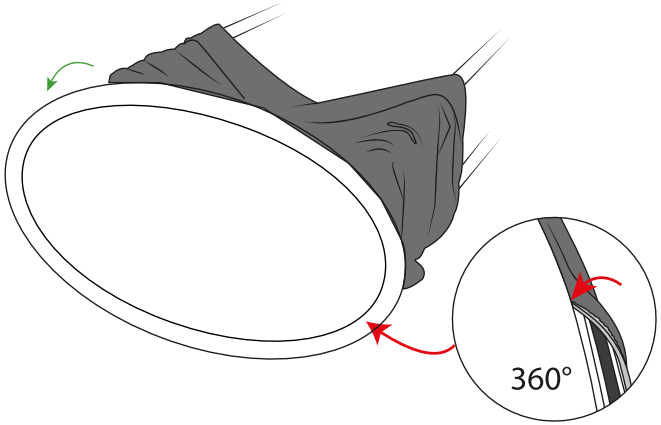

We are continually improving and modifying our product range and reserve the right to vary the specifications without prior notice. All dimensions and weights quoted are approximate and we accept no responsibility for variance. E&OE.

Assembly of the hardware and graphic

6

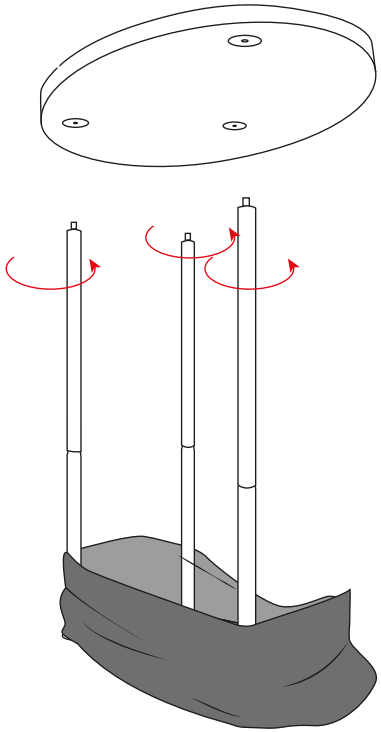

7

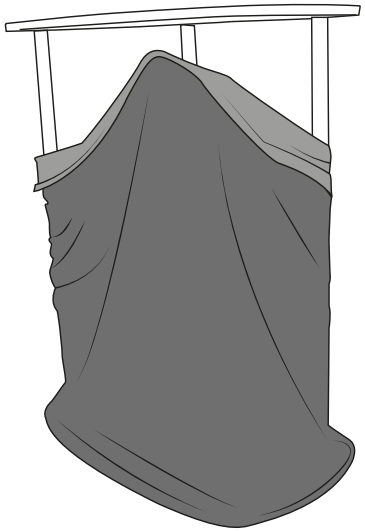

8

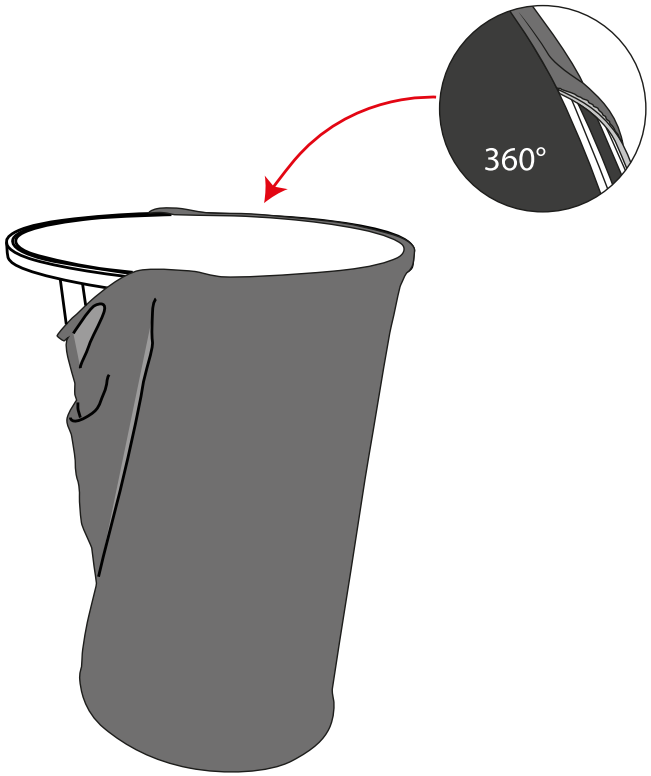

We are continually improving and modifying our product range and reserve the right to vary the specifications without prior notice. All dimensions and weights quoted are approximate and we accept no responsibility for variance. E&OE.