FASTFRAME™ COUNTER

Complete your exhibition stand with the FASTFRAME™ counter. A unique display solution that is easy to use and transport in its wheeled bag.

Product Specifications

- Aluminium frame with nylon corners
- Black MDF top and internal shelf
- Maximum load bearing: top (60kg to be distributed) / Internal shelf (10kg)
- Graphic attachment with SEG optional: polyester stretch or black back (black out)
- Nylon wheeled carry bag with carry handle included

Features and Benefits

- Quick and easy to assemble (tool free)
  - Pre-assembled frame
  - Thumbscrews to held the tabletop in place
- Internal storage space
- Strong structure

Recommanded Media

- Slightly stretch graphic, made with 3 x 12 mm SEG

Front of the counter

Collapsed frame

Carry bag

The printing templates provided are for guidance only. They take into account internal processes which may vary depending on your equipment, materials and finishes. If you are printing your own material, it is your responsibility to test the compatibility of your media with the product before use.

We are continually improving and modifying our product range and reserve the right to vary the specifications without prior notice. All dimensions and weights quoted are approximate and we accept no responsibility for variance. E&OE.

FASTFRAME™ COUNTER

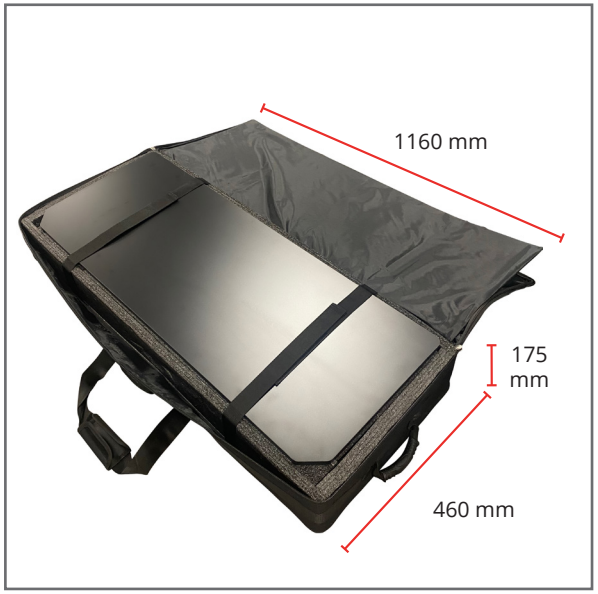

Thumbscrews to held the tabletop in place: :

Hardware Information

Code	Description	Hardware assembled dimensions (mm) w x h x d	Hardware assembled weight*	Package dimensions (mm) h x w x d	Package weight
FF-COUNTER-BLK	Fastframe™ Counter	1020 x 1025 x 410	16.03 kg	180 x 1190 x 470	21 kg

*Without graphic

We are continually improving and modifying our product range and reserve the right to vary the specifications without prior notice. All dimensions and weights quoted are approximate and we accept no responsibility for variance. E&OE.

FASTFRAME™ COUNTER

Assembly of the hardware and graphic

1

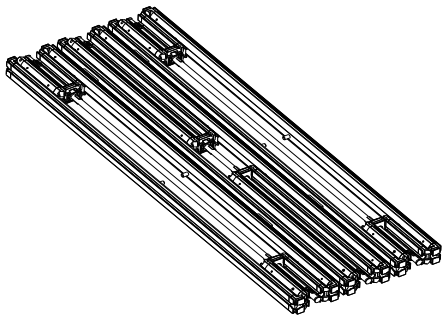

2

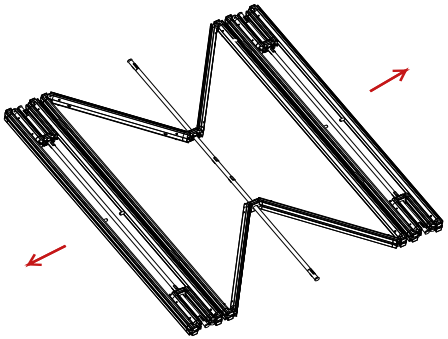

3

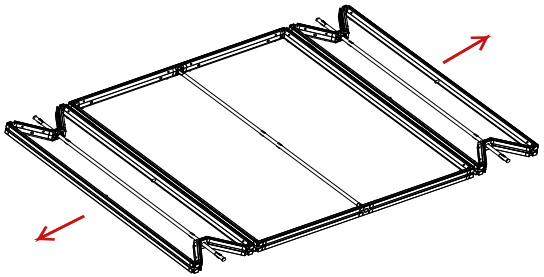

4

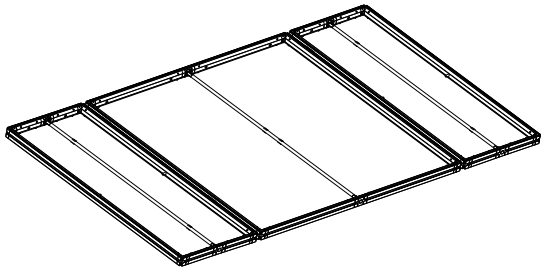

5

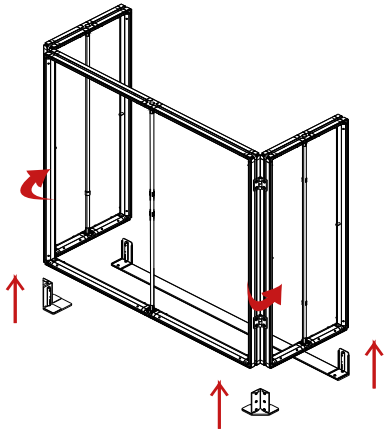

6

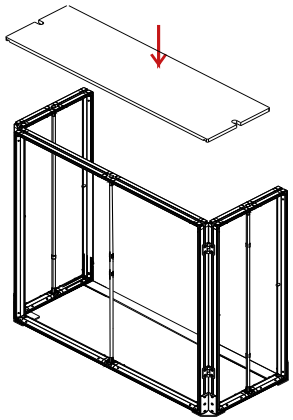

We are continually improving and modifying our product range and reserve the right to vary the specifications without prior notice. All dimensions and weights quoted are approximate and we accept no responsibility for variance. E&OE.

Assembly of the hardware and graphic

7

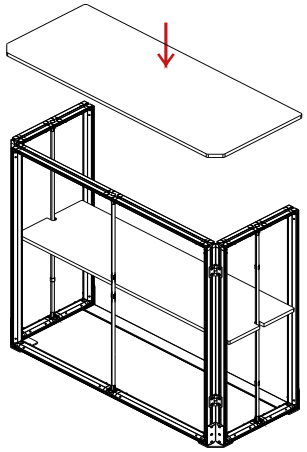

8

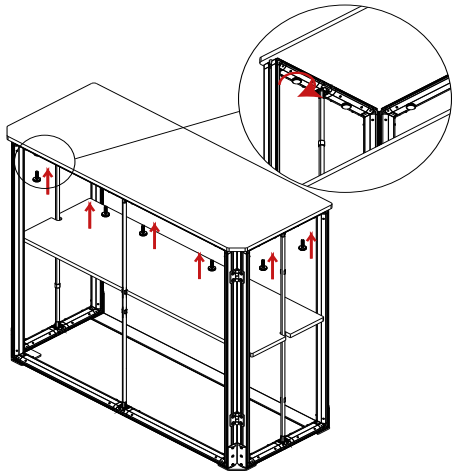

9

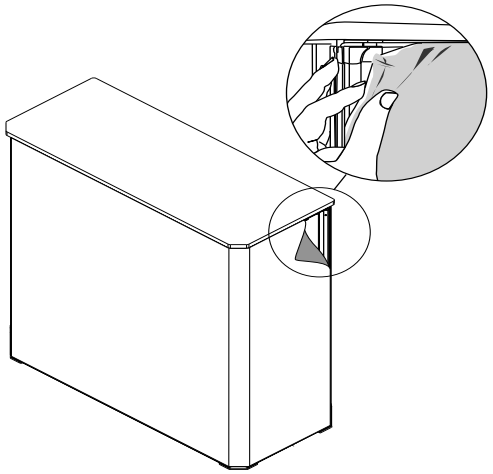

10

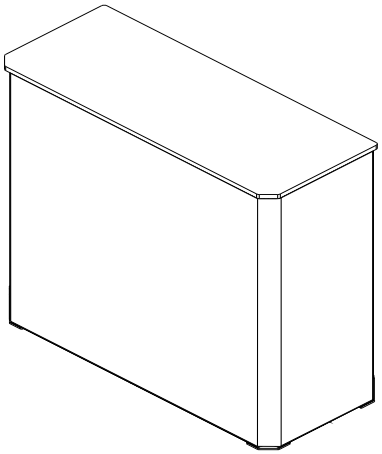

We are continually improving and modifying our product range and reserve the right to vary the specifications without prior notice. All dimensions and weights quoted are approximate and we accept no responsibility for variance. E&OE.